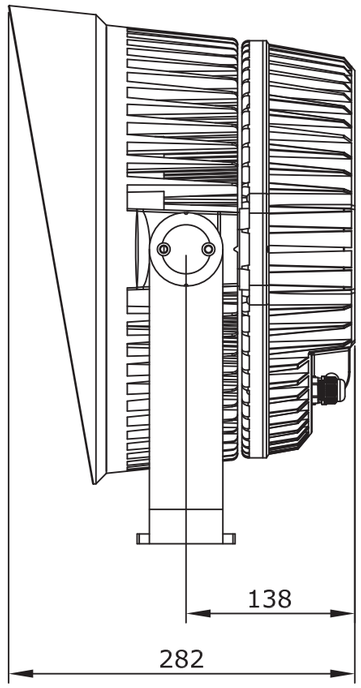

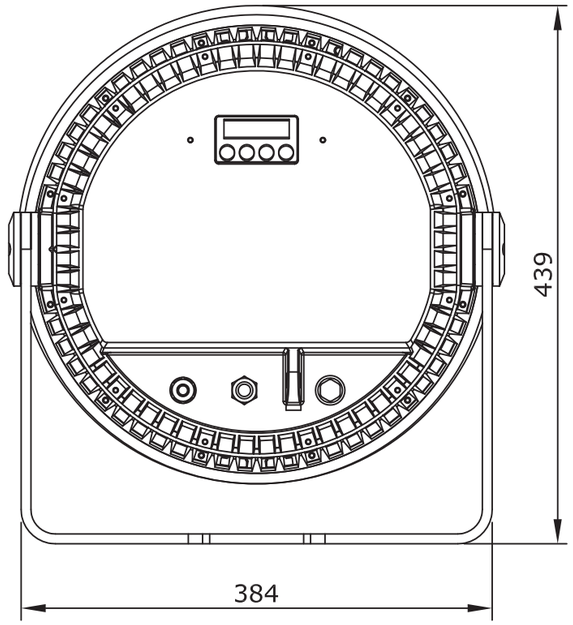

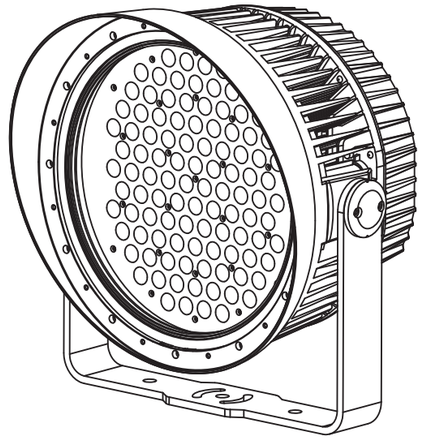

Exterior Wash 300/320

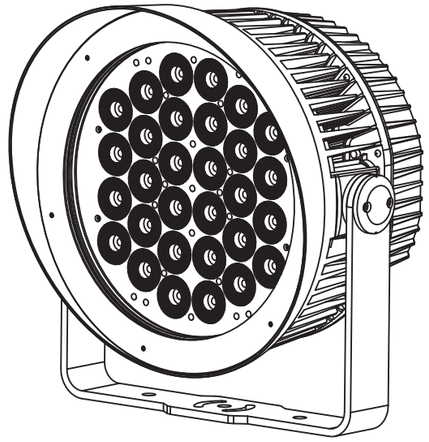

Exterior Wash 310

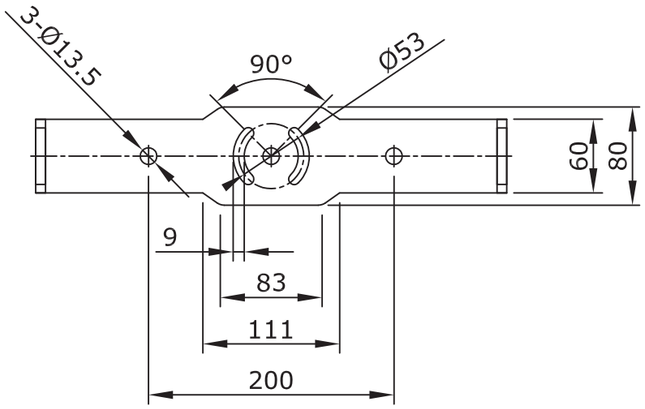

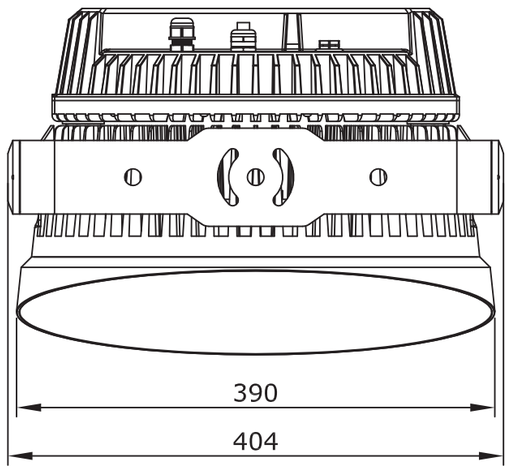

Rev.	Date	Resp.	CO no. / Comment
A	24.09.2018	rd_lto	First release

Martin by HARMAN

First used in

Material

Item to be

General linear tolerance

Item to be

General angular tolerance

Item to be

Color

Format A3 | Scale 1:5 | Unit mm

Description

Exterior Wash 300 Series

Item no.-Rev.

© 2018 Martin Professional ApS Confidential

Martin™ General Technical Specification apply to this item