smartMAC™

user manual

Martin®

Dimensions

All dimensions are in millimeters

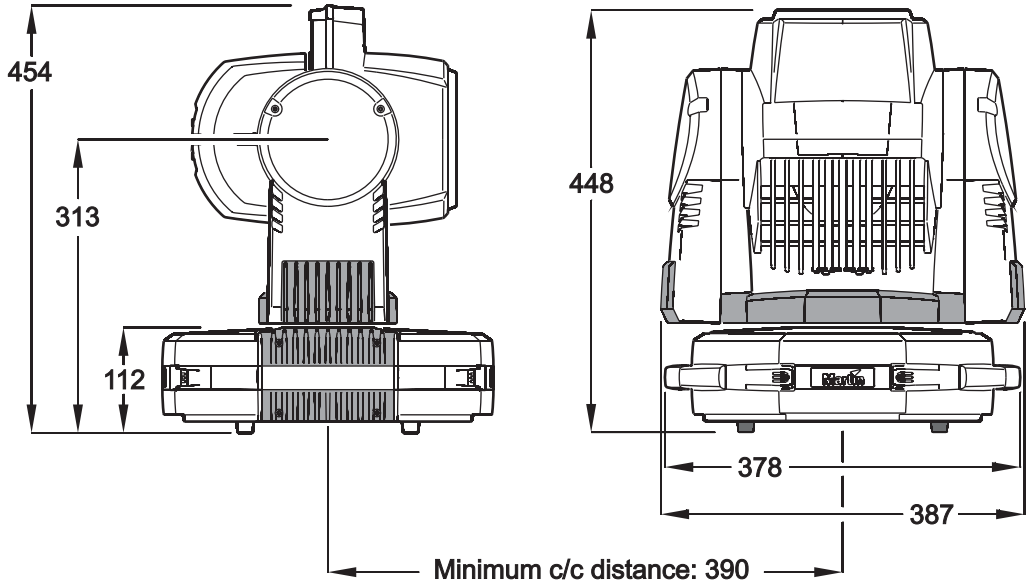

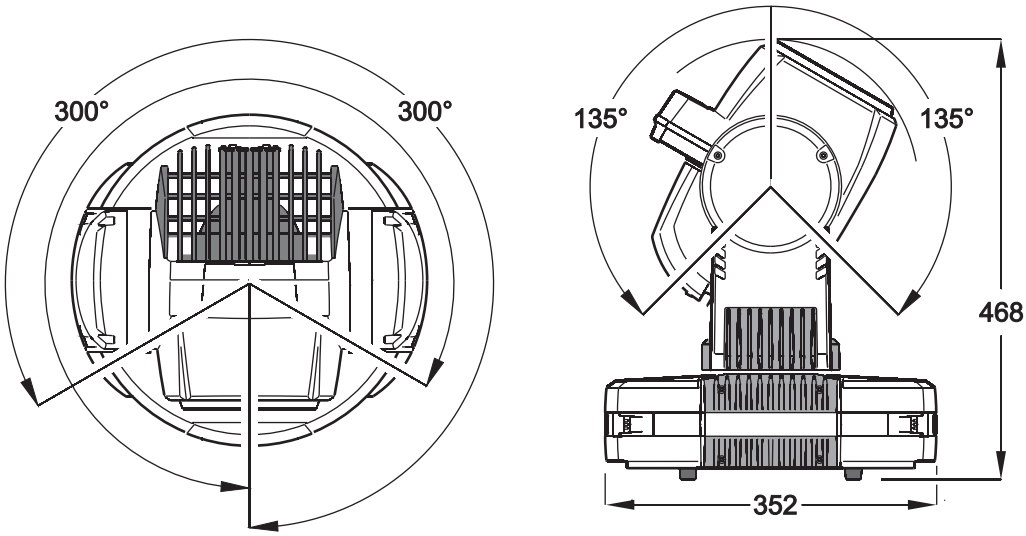

©2007-2010 Martin Professional A/S. Information subject to change without notice. Martin Professional A/S and all affiliated companies disclaim liability for any injury, damage, direct or indirect loss, consequential or economic loss or any other loss occasioned by the use of, inability to use or reliance on the information contained in this manual. The Martin logo, the Martin name and all other trademarks in this document pertaining to services or products by Martin Professional A/S or its affiliates and subsidiaries are trademarks owned or licensed by Martin Professional A/S or its affiliates or subsidiaries.

P/N 35000208, Rev. E

Safety Information

WARNING!
Read the safety precautions in this section before installing, powering, operating or servicing this product.

The following symbols are used to identify important safety information on the product and in this manual:

DANGER! Safety hazard. Risk of severe injury or death.	DANGER! Hazardous voltage. Risk of lethal or severe electric shock.	WARNING! Fire hazard.	WARNING! Burn hazard. Hot surface. Do not touch.	WARNING! Risk of eye injury. Safety glasses must be worn.	WARNING! Risk of hand injury. Safety gloves must be worn.	WARNING! Refer to user manual.

This product is for professional use only. It is not for household use.

This product presents risks of severe injury or death due to fire and burn hazards, electric shock, lamp explosion and falls.

Read this manual before installing, powering or servicing the fixture, follow the safety precautions listed below and observe all warnings in this manual and printed on the fixture. If you have questions about how to operate the fixture safely, please contact your Martin dealer or call the Martin 24-hour service hotline at +45 70 200 201.

PROTECTION FROM ELECTRIC SHOCK

- Disconnect the fixture from AC power before removing or installing any cover or part – including the lamp and fuses – and when not in use.
- Always ground (earth) the fixture electrically.
- Use only a source of AC power that complies with local building and electrical codes and has both overload and ground-fault (earth-fault) protection.
- Connect this fixture to AC power using either the supplied power cable or a listed, 3-conductor, 1.0 mm^2 (18 AWG) minimum cable that is rated minimum 8 amp, hard usage. Suitable cable types include SJT, ST, STW, SEO, SEOW and STO.
- Before using the fixture, check that all power distribution equipment and cables are in perfect condition and rated for the current requirements of all connected devices.
- Do not use the fixture if the power cable or power plug are in any way damaged, defective or wet, or if they show signs of overheating.
- Do not expose the fixture to rain or moisture.
- Refer any service operation not described in this manual to a qualified technician.

LAMP SAFETY

- Prolonged exposure to an unshielded discharge lamp can cause eye and skin burns. Do not stare directly into the light output. Never look at an exposed lamp while it is lit.
- Do not operate the fixture with missing or damaged covers, shields, lenses or ultraviolet screens.
- A hot discharge lamp is under pressure and can explode without warning. Allow the fixture to cool for at least 30 minutes and protect yourself with safety glasses and gloves before handling a lamp or servicing the fixture internals.
- Replace the lamp immediately if it becomes visually deformed, damaged or in any way defective
- Monitor hours of lamp use and lamp intensity and replace the lamp when it reaches the limit of its service life as specified in this manual or by the lamp manufacturer.
- Install only an approved lamp.
- If the quartz envelope of a discharge lamp is broken, the lamp releases a small quantity of mercury and other toxic gases. If a discharge lamp explodes in a confined area, evacuate the area and ventilate it thoroughly. Wear nitrite gloves when handling a broken discharge lamp. Treat broken or used discharge lamps as hazardous waste and send to a specialist for disposal.

PROTECTION FROM BURNS AND FIRE

- Do not operate the fixture if the ambient temperature (Ta) exceeds 40° C (104° F).
- The exterior of the fixture becomes very hot – up to 120° C (248° F) – during use. Avoid contact by persons and materials. Allow the fixture to cool with the lamp powered off for at least 30 minutes before handling or opening the effects hatch.
- Wear heat-resistant gloves when opening the effects hatch and replacing effects.
- Keep all combustible materials (e.g. fabric, wood, paper) at least 100 mm (4 ins.) away from the head.
- Keep flammable materials well away from the fixture.
- Ensure that there is free and unobstructed airflow around the fixture.
- Do not illuminate surfaces within 250 mm (10 ins.) of the fixture.
- Do not attempt to bypass thermostatic switches or fuses. Replace defective fuses with ones of the specified type and rating.
- Do not stick filters, masks or other materials onto any lens or other optical component.
- Do not modify the fixture in any way not described in this manual
- Install only genuine Martin parts.

PROTECTION FROM INJURY DUE TO FALLS

- If suspending or mounting the fixture above the ground, use a secondary attachment such as a safety cable that is approved for the weight of the fixture and installed as described in this manual.
- If suspending from a rigging structure, attach the fixture with two evenly spaced clamps. Do not use only one clamp.
- If using the product's quick-release bracket, check that the bracket is securely fastened to the mounting surface with eight fasteners. When installing a fixture in the bracket, check that all bayonet mounts are correctly engaged and immediately tighten both locking screws in the bracket.
- Ensure that any structure and/or hardware used can hold at least 10 times the weight of all devices suspended from them.
- Allow enough clearance around the head to ensure that it cannot collide with an object or another fixture when it moves.
- Check that all external covers and rigging hardware are securely fastened.
- Block access below the work area and work from a stable platform whenever installing, servicing or moving the fixture.

Contents

Dimensions . . . 2
Safety Information . . . 3
Introduction . . . 7
- Unpacking . . . 7
- Using for the first time . . . 7
- Connections panel . . . 8

AC power . . . 9
- Main fuse . . . 9
- Setting power voltage and frequency . . . 9
- Power cable . . . 10
- Power plug . . . 10
- Applying power . . . 10

Lamp . . . 11
- About the lamp . . . 11
- Lamp replacement . . . 11

Data link . . . 13
- Tips for reliable data transmission . . . 13
- Connecting the data link . . . 13

Physical installation . . . 14
- Using the quick-release bracket . . . 14
- Mounting the fixture on a truss . . . 16

Setup . . . 17
- Control panel and menu navigation . . . 17
- Setting stand-alone, master/slave or DMX operation . . . 17
- DMX address and protocol . . . 18
- Tailoring performance . . . 18
- Readouts . . . 19
- Manual control . . . 20
- Service utilities . . . 20
- Calibrating effects . . . 21
- LED indicators . . . 21

Effects . . . 22
DMX operation . . . 24
Stand-alone operation . . . 26
- Programming stand-alone operation . . . 26
- Synchronized master/slave operation . . . 27

Service and maintenance . . . 29
- Gobos . . . 29
- Effects access hatch and changing gobos and filters . . . 31
- Installing the diffuser filter . . . 32
- Cleaning . . . 34
- Lubrication . . . 34
- Fuse replacement . . . 34
- Firmware installation . . . 35
- Circuit board layout . . . 36

DMX protocol . . . 37
Control menu . . . 43
- DMX capture menu . . . 46

Control panel shortcuts . . . 46
Adjustment submenu . . . 47
Display messages . . . 48
Troubleshooting . . . 50
Specifications . . . 51

Notes

Introduction

Thank you for selecting the smartMAC™, an intelligent lighting fixture from Martin™. This moving-head spotlight features:

- 150 watt discharge lamp
- Motorized rotating gobo wheel with 6 interchangeable gobos plus open, indexing, continuous gobo rotation & scrolling, shake
- Motorized color wheel with 8 interchangeable color filters plus open
- Mechanical shutter with instant intensity control, 2 - 9 Hz strobe effects, pulse effects and shutter fading
- Music-triggered operation available for all effects
- Motorized focus, 2 m (6.5 ft.) to infinity
- 600° of pan and 257° of tilt
- DMX control
- Onboard control panel and LED display
- Stand-alone operation with up to 100 programmable scenes
- Synchronized (master/slave) stand-alone operation
- 10 pan/tilt and 10 effects macros, freely combinable, selected via DMX or onboard control panel
- Staggered start/macro chase
- DMX effects capture in stand-alone programming
- Fine (16-bit) control of gobo rotation, pan and tilt
- Silent convection cooling
- Effects access hatch for fast, tools-free gobo and color filter changes

For the latest firmware updates, documentation, and other information about this and all Martin Professional products, please visit the Martin website at http://www.martin.com

Comments or suggestions regarding this document may be e-mailed to service@martin.dk or posted to:

Service Department
Martin Professional A/S
Olof Palmes Allé 18
DK-8200 Aarhus N
Denmark

WARNING! Read “Safety Information” on page 3 before installing, powering, operating or servicing the smartMAC.

Unpacking

The smartMAC is packaged in either a cardboard box or a two-unit flight case that is designed to protect the product during shipment. The following items are included:

- Two clamp attachment brackets
- Quick-release surface mounting bracket
- This user manual

Using for the first time

Before applying power to the fixture:

- Carefully review “Safety Information” on page 3.

- Check that the fixture's power voltage and frequency settings match the local AC power source (see "Setting power voltage and frequency" on page 9). Adjust settings if necessary.
- If drawing power from a socket, install a suitable power plug on the power cable as described in "Power cable" on page 10.

Connections panel

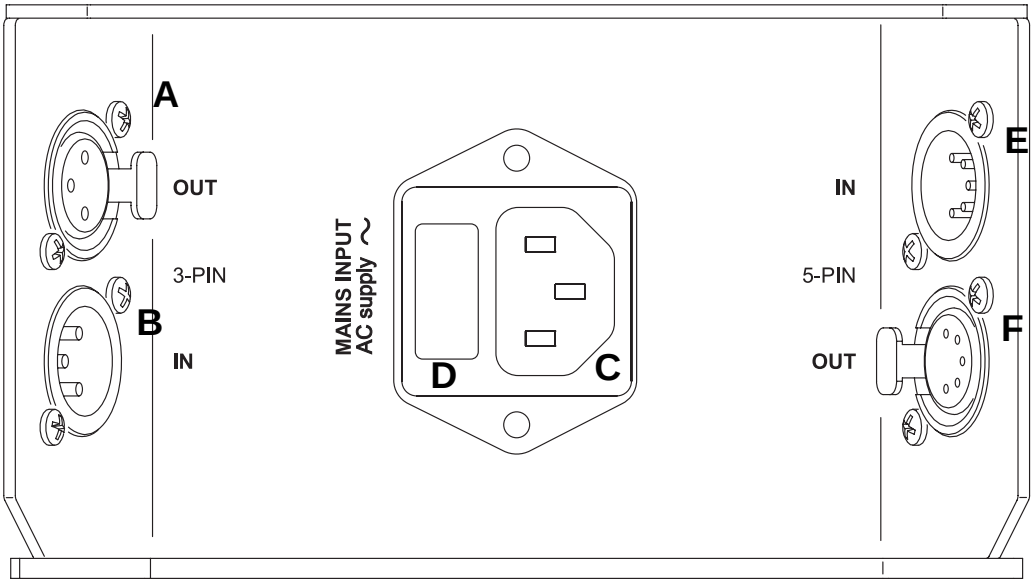

A - DMX data output connector (3-pin XLR)
B - DMX data input connector (3-pin XLR)
C - Power input connector
D - Fuseholder
E - DMX data input connector (5-pin XLR)
F - DMX data output connector (5-pin XLR)

Figure 1: Connections panel overview

AC power

WARNING! Read “Safety Information” starting on page 3 before connecting the smartMAC to AC power.

For protection from electric shock, the smartMAC must be grounded (earthed). The power distribution circuit must be equipped with a fuse or circuit breaker and ground-fault (earth-fault) protection.

Important! Do not use an external dimming system to supply power to the smartMAC as this may cause damage to the fixture that is not covered by the product warranty.

Main fuse

WARNING! Replace fuses with ones of the same type and rating only.

The smartMAC is protected by one 4.0 amp slow-blow main fuse located in a fuseholder next to the power input socket. See “Fuse replacement” on page 34 for details of accessing and changing the fuse.

Setting power voltage and frequency

The smartMAC features a manually switchable power supply that can be configured to accept 100-120 V and 200-240 V nominal AC power at 50 or 60 Hz.

WARNING! Check that power supply settings match the local AC supply before use.

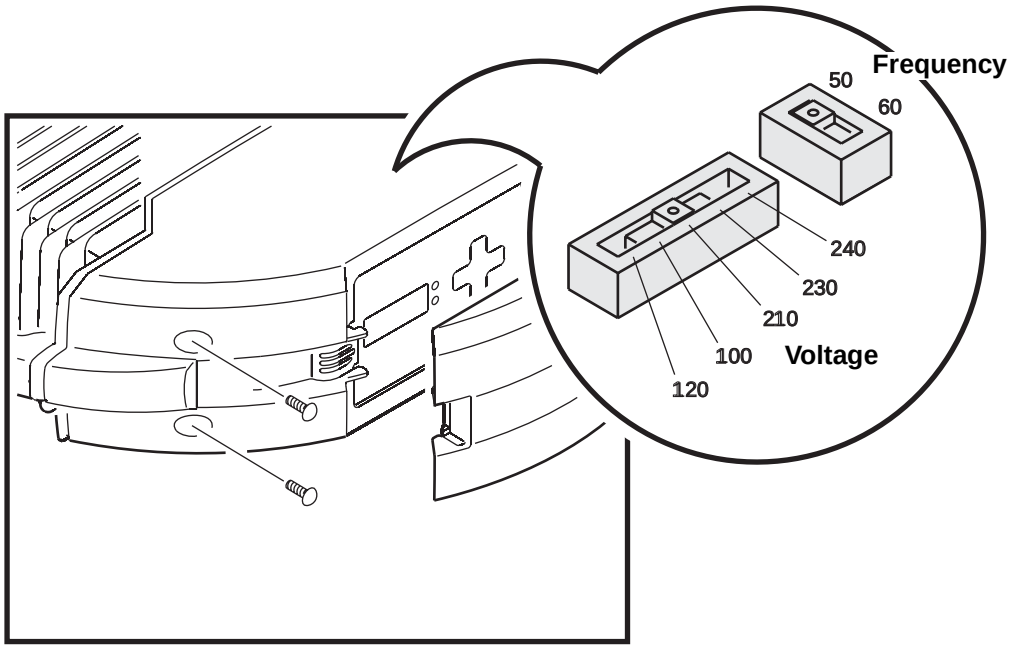

Figure 2: AC power voltage and frequency settings

The smartMAC is factory-configured for 230 V, 50 Hz operation. If your local AC power is not 230 V, 50 Hz, you must change the fixture’s voltage and frequency settings by moving selector switches inside the fixture.

To change voltage and frequency settings:

1. Disconnect the fixture from power and allow to cool for at least 30 minutes.
2. See Figure 2. Loosen the 4 Phillips screws in the display side cover on either side of the display panel and lift the cover away from the fixture.
3. Locate the selector switches on the PCB behind the display.
4. Move the voltage switch to the setting closest to your local AC voltage. If your voltage is halfway between 2 settings, select the higher setting. For example, if your local voltage is 110 V, set the voltage selector to 120 V. if your local voltage is 220 V, set the voltage selector to 230 V.
5. Move the frequency switch to the setting that matches your local AC frequency: 50 or 60 Hz.
6. Reinstall the cover before reapplying power.

Power cable

The smartMAC must be connected to power using either the supplied power cable or a listed 1.0 mm^2 (18 AWG) minimum, three-conductor SJT (or better) power cable rated 8 amp minimum with an IEC female cable connector.

Power plug

You may need to fit the power cable with a power plug that is suitable for your AC power outlets. If so, install a grounding-type (earthed) plug that is correctly rated for the current and power requirements of the fixture. Follow the plug manufacturer's instructions. Table 1 shows some possible pin identification schemes; if pins are not clearly identified, or if you have any doubts about proper installation, consult a qualified electrician.

Wire Color (EU)	Wire Color (US)	Pin	Symbol	Screw (US)
brown	black	live	L	yellow or brass
blue	white	neutral	N	silver
yellow/green	green	ground (earth)	⏚	green

Table 1: Power plug connections

Applying power

Important! ***Do not supply the fixture with power from a dimmer system, as this may cause damage that is not covered by the product guarantee.***

Check that power cables are undamaged and rated for the current requirements of all connected devices.

Plug the fixture's power cable into the fixture's IEC socket and a grounded (earthed) source of AC power.

Lamp

WARNING! Installing a lamp that is not specified in this manual may create a safety hazard and damage the fixture. Replace the lamp immediately if it is deformed or in any way defective.

About the lamp

The smartMAC is designed for use with a Philips MSD 150/2 discharge lamp and is supplied with this lamp installed. The Philips CDM-SA/T 150W/942 lamp is also approved for use with the smartMAC. These lamps have the following specifications:

Lamp	Average life	Color temp.	CRI	Luminous flux	Efficacy
Philips MSD 150/2	3000 hours	8500 K	70	10 500 lm	70 lm/w
Philips CDM SA/T 150	9000 hours	4200K	95	14 000 lm	88 lm/w

Table 2: Lamp specifications

The Philips MSD 150/2 lamp has a color temperature of 8500 K, a color rendering index of approximately 70, and an average service life of 3000 hours at full intensity.

To reduce the risk of lamp failure or explosion, replace the lamp when it reaches the limit of its average service life. Hours of lamp use are logged and can be read in the fixture's display (see "Readouts" on page 19).

Lamp replacement

WARNING! Wear safety glasses and gloves when handling discharge lamps.

Replacement lamps are available from your Martin dealer.

The clear bulb must be perfectly clean. Do not touch it with your fingers. Clean the lamp with an alcohol wipe and polish it with a clean, dry cloth before installing, particularly if you accidentally touch the bulb.

To replace the lamp:

1. Disconnect the fixture from power and allow it to cool for at least 30 minutes.

2. The lampholder is an integral part of the lamp access cover. See Figure 2. Remove the two Torx screws **A** and **B** from the lamp access cover and lift the cover gently away from the fixture until the lamp is clear. Avoid straining the lamp wiring.
3. Holding the lamp by its base, pull it up and out of the lampholder.
4. Holding the new lamp by its base only and keeping the lamp square to the lampholder, push the lamp contacts fully into the lampholder.
5. Put the lamp access cover back into position, sliding the new lamp back into the fixture as you do so. Reinstall the screws to secure the cover before reapplying power.
6. After installing a new lamp, reset the lamp hour counter (see “Lamp management” on page 19). It may also be necessary to adjust the lamp as described in the next section.

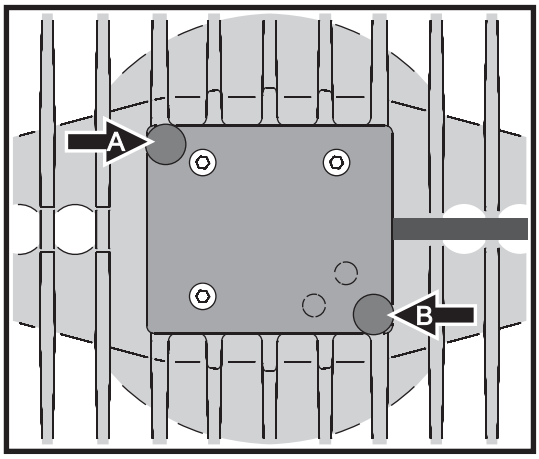

Figure 2: Lamp access cover retaining screws

Lamp adjustment

WARNING! Adjust the lamp with the fixture cool. The fixture may become hot during adjustment, so avoid contact and protect your hands with heat-resistant safety gloves.

As well as being undesirable for aesthetic reasons, a significant hot-spot in the beam will focus extra heat onto optical components and may cause damage that is not covered by the product warranty.

After fitting a new lamp, adjustment may be required to obtain an even beam.

To adjust the lamp:

1. If the fixture has been in use, allow it to cool for at least 30 minutes.
2. Apply power, allow the fixture to reset, then turn on the lamp and open the mechanical shutter.
3. Aim the fixture at an even surface and make sure no further commands can be sent by DMX.
4. See Figure 3. Screw the 3 mm Allen screws **C**, **D** and **E** in or out to obtain the most even beam.

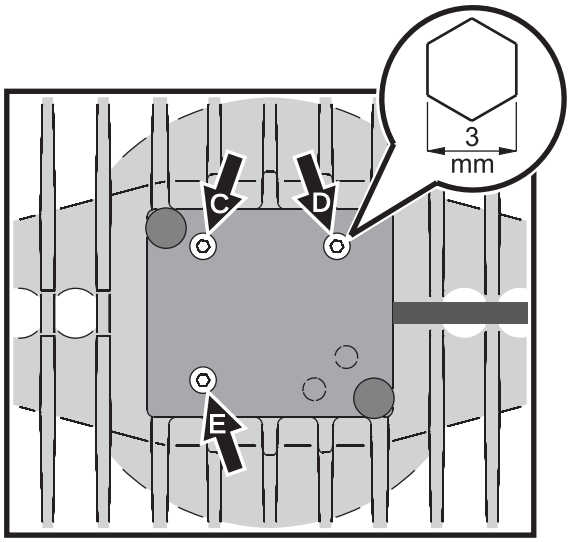

Figure 3: Lamp adjustment screws

Data link

A data link is required in order to control a smartMAC via DMX or synchronize fixtures in stand-alone operation.

Important! ***Do not connect more than 1 data input and 1 data output on a fixture.***

The smartMAC has both 3-pin and 5-pin XLR connectors for DMX data input and output. The pin-out on all connectors is pin 1 = shield, pin 2 = cold (-), and pin 3 = hot (+).

Pins 4 and 5 in the 5-pin XLR connectors are available for enhanced features in conformity with DMX 512-A. Pin-out is pin 4 = data 2 cold (-) and pin 5 = data 2 hot (+).

Sockets are wired in parallel: both inputs connect to both outputs. *To avoid damage to the fixture, never use more than one input and one output socket.*

Tips for reliable data transmission

- Use shielded twisted-pair cable designed for RS-485 devices: standard microphone cable cannot transmit control data reliably over long runs. 24 AWG cable is suitable for runs up to 300 meters (1000 ft). Heavier gauge cable and/or an amplifier is recommended for longer runs.
- Never use both a fixture's outputs to split the link. To split the link into branches, use a splitter such as the Martin 4-Channel Opto-Isolated RS-485 Splitter/Amplifier.
- Do not overload the link. Up to 32 devices may be connected on a serial link.
- Terminate the link by installing a termination plug in the output socket of the last fixture. The termination plug, which is a male XLR plug with a 120 Ohm, 0.25 Watt resistor soldered between pins 2 and 3, "soaks up" the control signal so it does not reflect and cause interference. If a splitter is used, terminate each branch of the link.
- Some older fixtures have reversed polarity data sockets (pin 2 hot and pin 3 cold). Polarity is normally labelled on devices and described in user manuals. *Use a phase-reversing cable between the smartMAC and any device with reversed polarity.*

3-pin to 3-pin phase-reversing adaptor

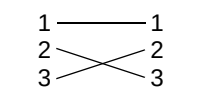

P/N 11820006

Male termination plug

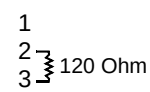

P/N 91613017

Connecting the data link

1. Connect the DMX data output from the controller to the smartMAC's 3-pin or 5-pin input (male) socket.
2. Using the sockets that match your data cable, connect the output of the fixture closest to the controller to the input of the next fixture.
3. Insert a male 120 Ohm XLR termination plug in the 3-pin or 5-pin output of the last fixture on the link.

Physical installation

The smartMAC can be placed on a horizontal surface such as a stage, mounted on a quick-release bracket or clamped to a truss in any orientation. The quarter-turn clamp bracket mounting points in the base of the fixture allow clamp brackets to be fastened parallel or perpendicular to the front of the fixture.

WARNING! Attach an approved safety cable to the attachment point labelled "SAFETY WIRE" in the base of the fixture. Do not use the carrying handles for secondary attachment.

Check that all surfaces to be illuminated are minimum 250 mm (10 ins.) from the fixture, that combustible materials (wood, fabric, paper, etc.) are minimum 100 mm (4 ins.) from the head, that there is free airflow around the fixture and that there are no flammable materials nearby.

Make sure that it is impossible for the moving head to collide with another fixture or other object.

Using the quick-release bracket

The smartMAC is supplied with a quick-release bracket that can be bolted to a surface in any orientation. Using the bracket, the fixture can be mounted and secured or removed in a matter of seconds.

Note that the large hole in the center of the bracket and a cutout in the corner of the bracket closest to the locking screw can – if desired – be used to route power, data and safety cables from the mounting surface to the fixture.

WARNING! Make sure that the quick-release bracket when installed can hold at least 10 times the weight of the smartMAC.

Attach an approved safety cable to the attachment point labelled "SAFETY WIRE" in the fixture base and to a safety attachment point such as an eyebolt in the mounting surface. Do not use the quick-release bracket as a safety attachment point, as this will leave the fixture unsecured if the bracket or the fasteners that hold it fail.

When mounting a smartMAC in the bracket, turn it fully clockwise and ensure that the bayonet mounting pins are fully engaged in the base of the fixture. Tighten the safety lock screw (B in Figure 4) and double-check that the fixture is secure.

To install the smartMAC on a surface using the quick-release bracket:

1. Check that the surface or structure used to support the quick-release bracket can bear at least 10 times the weight of all installed fixtures and equipment.
2. See Figure 4. Fasten the bracket securely to the mounting surface using eight fasteners in the 5.5 mm mounting holes **A**. Make sure that the bracket when fastened will hold at least 10 times the weight of the smartMAC.
3. Install a safety attachment point (a hardened steel eyebolt, for example) in the mounting surface. Ensure that the safety attachment point will hold 10 times the weight of the smartMAC
4. Attach one end of an approved safety cable to the safety attachment point in the mounting surface. The safety cable can be passed through the hole **C** in the center of the mounting bracket if desired.

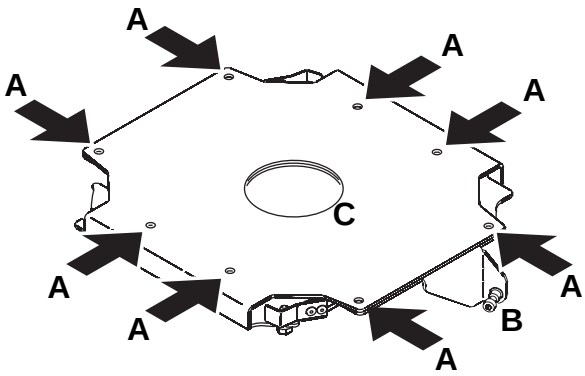

Figure 4: Quick-release bracket mounting points

5. See Figure 5. Hold the fixture up to the bracket so that edge **A** of the raised flap slides into corner **B** of the connections recess in the fixture base, then twist the fixture clockwise so that the bayonet pins in the bracket engage fully in the fixture base.

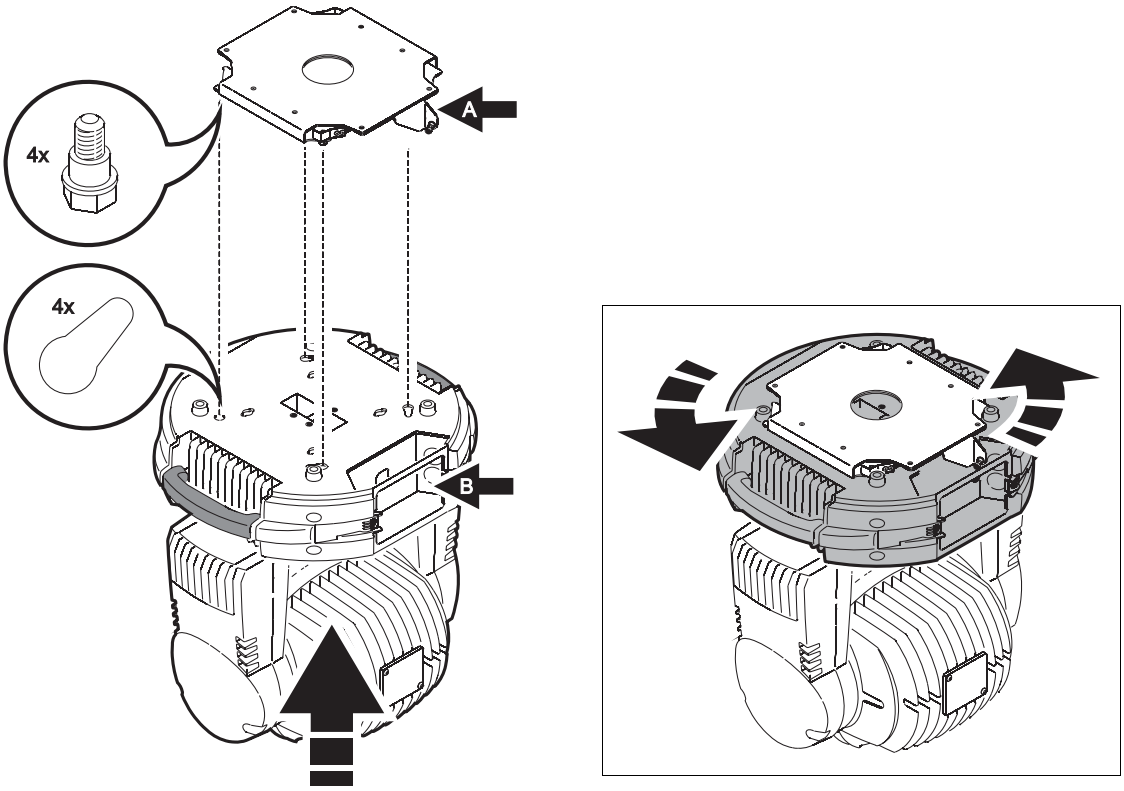

Figure 5: Bayonet mounting in the quick-release bracket

6. See Figure 6. Tighten the locking screw in the raised flap **A** in the bracket to secure the fixture.
7. Check that the fixture is held securely and that cables are routed out of the path of the moving head.

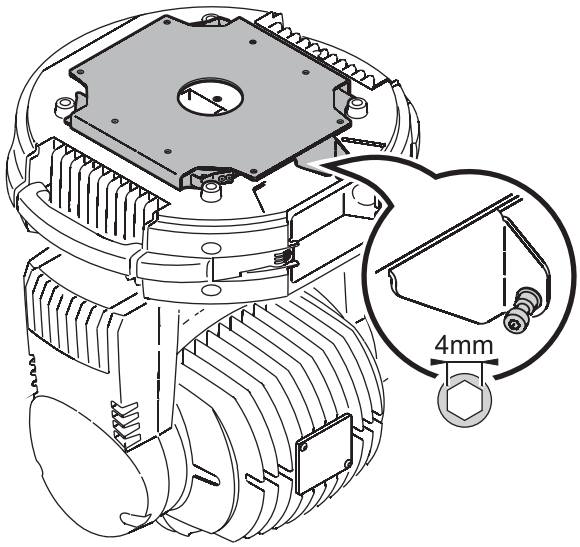

Figure 6: Quick-release bracket locking screws

8. See Figure 7. The quick-release bracket adds 7 mm (0.3 in.) to the overall height of the fixture.

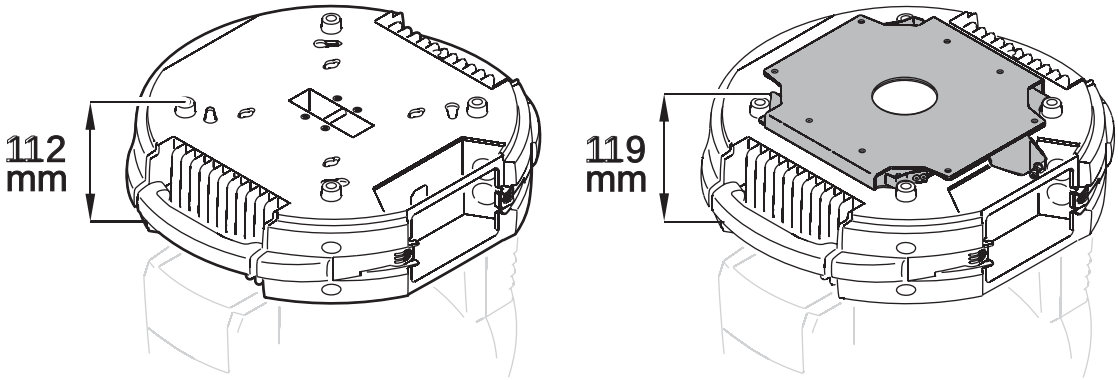

Figure 7: Quick-release bracket dimensions

Mounting the fixture on a truss

The smartMAC can be clamped to a truss or similar rigging structure in any orientation. Clamp brackets can be attached to the base of the fixture using quarter-turn quick connectors.

WARNING! Use two clamps to rig the fixture. Lock each clamp by turning both 1/4-turn fasteners fully clockwise.

To clamp a smartMAC to a truss:

1. Check that the rigging structure can bear at least 10 times the weight of all fixtures and equipment to be installed on it.
2. Obtain two rigging clamps and check that they are undamaged and can bear at least 10 times the weight of the fixture. Bolt each clamp securely to a clamp bracket with a minimum grade 8.8 M12 bolt and lock nut.
3. See Figure 8. Align each of the two clamp brackets with two mounting points in the base. Insert the quarter-turn fasteners into the base and turn all levers a full 90° clockwise to lock.

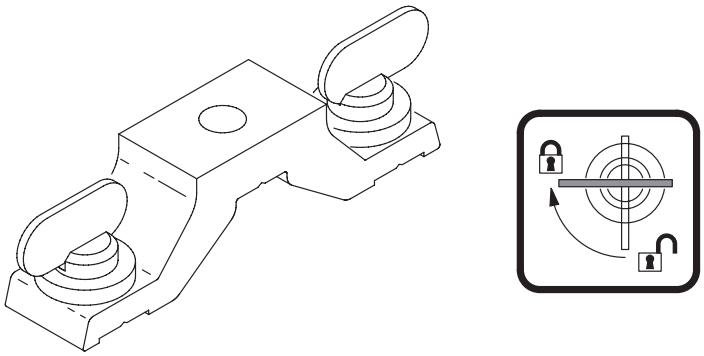

Figure 8: Clamp bracket and quarter-turn fasteners

4. Block access under the work area. Working from a stable platform, hang the fixture on the truss with the arrow on the base towards the area to be illuminated. Tighten the rigging clamps.
5. Secure the fixture against clamp or bracket failure with a safety wire that can bear at least 10 times the weight of the fixture using the attachment point marked “SAFETY WIRE” in the base of the fixture. This attachment point is designed to fit a carabiner clamp. Do not use carrying handles as safety attachment points.
6. Check that the head will not collide with other fixtures or objects. Allow a minimum center-to-center distance of 390 mm (15.4 ins.) minimum between smartMAC fixtures.

Setup

WARNING! Read "Safety Information" on page 3 before installing, powering, operating or servicing the smartMAC.

Control panel and menu navigation

The DMX address and any status messages are shown in the display when the smartMAC is powered on.

The control panel is used to set the smartMAC to DMX or stand-alone (single fixture or synchronized master/slave) operation, set its DMX address, configure individual fixture settings (personality), read out data, and execute service utilities.

See "Control menu" starting on page 43 for a complete list of the menus and commands available in the control panel.

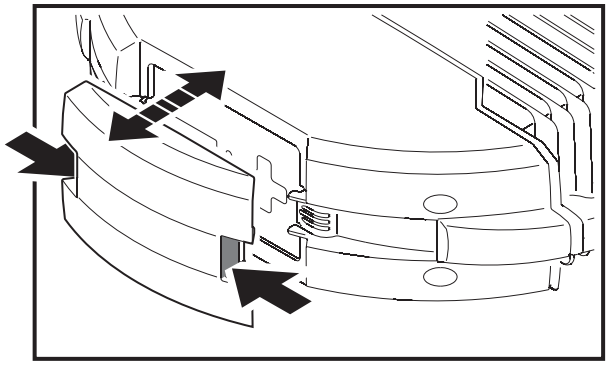

Figure 9: Control panel access cover

See Figure 9. For access to the control panel, squeeze the tabs on the sides of the control panel cover inwards and lift the cover off the fixture.

See Figure 10. To enter a menu, press [Menu]. Press the [Up] and [Down] arrows to scroll within a menu. To select a function or submenu, press [Enter]. To escape a function or move back one level in the menu structure, press [Menu].

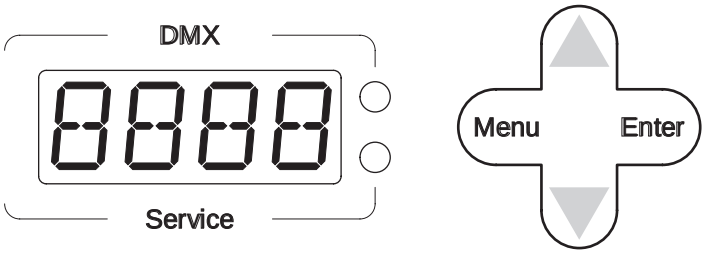

Figure 10: Control panel overview

Note: [Enter] must be pressed and held for a few seconds to enter the Utilities menu (UTIL).

Setting stand-alone, master/slave or DMX operation

DMX control, stand-alone and synchronized master/slave modes are selected as follows:

- To set the smartMAC to stand-alone operation, press [Up] or [Down] until SA is displayed, then select RUN, then ENA.
- To set the smartMAC to synchronized stand-alone operation, in which a master fixture sends synchronizing signals to slave fixtures, select SA→SAE then MAS for the master fixture, SLA for slave fixtures, or SIN to return to single fixture operation.
- To disable stand-alone operation and return the smartMAC to DMX control, select SA→RUN→DIS.

The smartMAC is supplied configured for DMX control by default.

DMX address and protocol

The DMX address, also known as the start channel, is the first channel used to receive instructions from the controller. For independent control, each fixture must be assigned its own control channels. Two smartMACs may share the same address, however, if identical behavior is desired. Address sharing can be useful for diagnostic purposes and symmetric control, particularly when combined with the inverse pan and tilt options.

Depending on the selected DMX mode, the smartMAC requires 12 or 15 DMX channels. 8-bit mode uses 12 channels and provides coarse control of all effects. 16-bit mode uses 15 channels and provides the 8-bit mode features plus fine control of gobo rotation, pan and tilt.

DMX addressing is limited to channels 1-501 in 8-bit mode and 1-498 in 16-bit mode. This makes it impossible to set the DMX address so high that you are left without enough control channels for the fixture.

To set DMX address and 8-bit or 16-bit mode

1. Press [Menu] to enter the main menu.
2. Press [Up] or [Down] until ADDR is displayed. Press [Enter]. To snap to channel 1, press [Enter] and [Up]. Scroll to the desired channel and press [Enter]. Press [Menu] to return to the first level of the main menu.
3. Press [Up] or [Down] until PSET is displayed. Press [Enter]. Select 8BIT for 8-bit mode or 16BIT for 16-bit mode. Press [Enter]. 16-bit mode uses 3 additional DMX channels to provide fine control of rotating gobo, pan and tilt.

Tailoring performance

Movement

The smartMAC provides several options for optimizing movement for different applications.

- The pan and tilt invert (PATI) menu swaps and/or inverts pan and tilt.
- The pan/tilt speed (PTSP) menu provides 2 settings: FAST and NORM. The NORM (normal) setting gives smoothest pan/tilt movement during slow scene changes and quietest operation. It is best for most applications and is the default setting. FAST provides better performance in applications where speed is most important.
- The effects speed (EFSP) menu provides 3 settings: PTSS, NORM and FAST. If set to PTSS (pan/tilt speed slave), effects speed follow the pan/tilt speed set in the PTSP menu. This is the default setting. As with pan/tilt speed, NORM gives smoothness and silence. FAST gives extra speed.
- The pan/tilt and effects speed settings described above are overridden and set to ‘slow’ if silent mode is selected in the PERS→MODE menu.
- The shortcuts (PERS→SCUT) setting determines whether effects take the shortest path between two positions, crossing the open position if necessary, or always avoid the open position.

Display

The display on/off setting (PERS→DISP) determines whether the display remains on constantly (ON) or goes into sleep mode 2 minutes after the last key press (2 MN) or 10 minutes after the last key press (10MN). The display can also be set so that it is activated if the fixture diagnoses an error.

The display intensity (PERS→DINT) setting controls display brightness. Select AUTO for automatic display or manually set the intensity to a level from 10 to 100.

To invert the display when the fixture is installed base up, press [Up] and [Down] simultaneously.

DMX reset

The DMX reset (PERS→DRES) setting controls the behavior of the reset command. When set to ON, the command is fully enabled. When set to OFF, the command is disabled to prevent accidental resets. When set to 5SEC, the command must be sent for five seconds. The special combination of DMX values listed under channel 1 on page 37 allows you to execute a reset even when the command is disabled.

Noise reduction mode

The noise reduction mode (PERS→MODE) setting gives two effect movement options that give varying degrees of quiet operation:

- When set to NORM, pan, tilt and effects obey their settings entered elsewhere in the control menus.
- When set to ‘silent’ mode (SLNT), pan, tilt and effects are set to slow movement in order to minimize noise.

SLNT mode overrides pan, tilt and effects speed settings entered elsewhere in the control menus.

Custom settings

The custom settings function DFSE→CUS 1 - CUS3 allows you to save and recall three sets of fixture settings. The savable settings are DMX mode, pan/tilt speed, pan/tilt inverse and swap, display, DMX reset, shortcuts, noise reduction mode and effects speed.

All settings can be returned to factory defaults using the DFSE→FACT→LOAD command.

Readouts

Total hours of use

INFO→TIME→HRS provides a resettable (RSET) and a non-resettable (TOTL) counter for hours of use (i.e. number of hours with power applied to the fixture). To return the resettable counter to zero, display it and then press [Up] until the counter reads 0. The non-resettable counter displays total hours of use since the fixture was manufactured.

Lamp management

The smartMAC monitors lamp operation:

- INFO→TIME→L HR provides a resettable (RSET) and a non-resettable (TOTL) counter that display the number of hours the lamp has been on.
- INFO→TIME→L HR→EXLL displays the expected total lifetime of the lamp in hours. This figure is used as the basis for lamp lifetime warnings. It is set to 3000 by default but this can be changed via the PERS→EXLL menu.
- INFO→TIME→L ST provides a resettable (RSET) and a non-resettable (TOTL) counter that display the number of lamp strikes (i.e. number of times the lamp is powered on).

To return a resettable counter to zero, display it and then press [Up] until the counter reads 0.

The non-resettable counters display totals since the fixture was manufactured.

Lamp lifetime warnings

If lamp lifetime warnings are enabled by setting PERS→SLLW to ON:

- 200 hours before the lamp reaches the end of its expected lifetime, the Service LED lights yellow and LLW flashes in the display
- When the lamp reaches the end of its expected lifetime, the Service LED lights red, LLW continues to flash in the display and power to the lamp is shut down.

The lamp’s expected lifetime is set to 3000 hours by default. If a lamp with a different expected lifetime is installed, change the lifetime via the PERS→EXLL menu.

Lamp lifetime warnings are disabled by default.

Lamp explosion mode

If a lamp fails, LAEX appears in the fixture’s display and the fixture enters lamp explosion mode, in which pan and tilt are locked and the fixture does not respond to DMX control. If LAEX is displayed, cut power to the fixture and do not operate it until you have checked the lamp and replaced if necessary. Pan and tilt are released and DMX control is re-enabled when power is reapplied.

Temperature

INFO→TEMP provides temperature readouts for the head and the main PCB in the base.

Firmware version

INFO→VER displays the version number of the installed firmware. The firmware version is also displayed briefly at startup.

DMX

The DMX log (DMXL) menu provides useful information for troubleshooting control problems.

RATE displays the DMX refresh rate in packets per second. Values lower than 10 or higher than 44 may result in erratic performance, especially when using tracking mode.

QUAL displays the quality of the received DMX data as a percentage of packets received. Values much below 100 indicate interference, poor connections, or other problems with the serial data link that are the most common cause of control problems.

STCO displays the DMX start code. Packets with a start code other than 0 may cause irregular performance.

The remaining options under DMXL display the DMX values received on each channel. If the fixture does not behave as expected, reading the DMX values can help you troubleshoot the problem.

Manual control

The manual control menu (MAN) allows you to reset the fixture (RST) and control individual effects. See '*Control Menu'* on page 45 for a full list of commands.

Manual control of macros

As well as controlling individual effects, the manual control menu allows any combination of the 40 pan/tilt and 40 effects macros to be selected (MAN→PTMA and MAN→PTMA). Selecting a macro starts a pre-programmed sequence of effects, effectively allowing you to run a stand-alone light show without the need for a DMX controller.

Service utilities

Important! ***[Enter] must be held for several seconds to access the utilities menu.***

Test sequences

TSEQ provides a general test of all effects, allowing testing without a controller.

UTIL→PCBT provides routines for circuit board testing that are for service use only.

Feedback toggles

On-the-fly position correction systems monitor pan and tilt and effects. If a position error is detected, the fixture self-corrects. If the system cannot correct the position within 10 seconds, feedback is automatically disabled.

Pan/tilt position correction can be temporarily disabled by setting UTIL→FEDA to off. Effect position correction can be temporarily disabled by setting UTIL→EFFD to off. Off settings are not saved, and position correction systems will be re-enabled the next time the fixture starts.

Adjustment

The adjustment menu (UTIL→ADJ) provides manual control for making mechanical adjustments. See page 46.

Calibration

The calibration menu (UTIL→CAL) allows offsets relative to mechanical reset or home positions to be entered in the fixture software. This lets you fine tune optical alignment and achieve uniform performance between fixtures. Shutter fading and focus are calibrated to defined points. The other effects are calibrated relative to an arbitrary reference fixture.

All offsets can be set to the middle of their adjustment range by applying the default offset command: select UTIL→CAL→DFOF→SURE then press [Enter].

Calibrating effects

1. Apply power.
2. To calibrate focus, first remove the bottom head cover. Select UTIL→CAL→FOCU and press [Enter]. Run the focus car to the rearmost limit of its travel (i.e. furthest back towards the lamp) where it is pressing both end stop switches fully closed. Adjust the focus car forwards slightly until you hear an audible click from the end stop switches as they open. Press [Enter] to save the setting. Replace the bottom head cover.
3. Pan calibration is easiest when multiple fixtures are stacked vertically. To calibrate, set tilt positions for easy one-over-the-other comparison and set each fixture to the same pan DMX value. Select one fixture to be the reference fixture. On the other fixtures, select UTIL→CAL→P OF and press [Enter]. Adjust the offset as necessary to align the beam with the reference beam. Press [Enter] to save the setting.
4. Tilt calibration is easiest when multiple fixtures are arranged horizontally. To calibrate, set pan positions for easy side-by-side comparison and set each fixture to the same tilt DMX value. Select one fixture to be the reference fixture. On the other fixtures, select UTIL→CAL→T OF and press [Enter]. Adjust the offset as necessary to align the beam with the reference beam. Press [Enter] to save the setting.

Software upload

The upload mode command (UTIL→UPLD) prepares the fixture for a software update. This command is not normally necessary, as upload mode is engaged automatically by the uploader.

LED indicators

See Figure 10 on page 17. The two LEDs on the right of the display give the following information:

DMX LED

The DMX LED lights when the fixture is receiving a valid DMX signal.

Service LED

The Service LED lights red if the fixture requires a service intervention. At the same time, a message will appear in the display indicating the type of service required.

The Service LED blinks when the fixture is in factory service mode.

If lamp life warnings are enabled in the PERS→SLLW control menu, the Service LED lights yellow 200 hours before the lamp reaches the end of its expected lifetime and lights red when the lamp reaches the end of its expected lifetime. The expected lamp lifetime can be set in the PERS→EXLL menu.

Effects

This section describes the effects available in the smartMAC. Details of controlling effects via DMX or programming effects in stand-alone operation are covered in the relevant sections later in this manual.

Shutter

The shutter provides instant open and blackout as well as variable speed regular and random strobe, opening/closing pulse effects, music triggered operation and fading.

Color wheel

Besides an open position with no color, the color wheel provides 8 dichroic color filters in the following positions:

1. Blue – P/N 46404433
2. Light green – P/N 46404434
3. Orange – P/N 46404436
4. Light yellow – P/N 46404435
5. Pink – P/N 46404431
6. Magenta – P/N 46404437
7. Fluorescent (Congo) – P/N 46404432
8. Deep red – P/N 46404430

The color wheel can be scrolled continuously (giving split colors), scrolled in steps (giving full colors only) rotated continuously, set to music-triggered operation or set to random color chases (auto trig).

Rotating gobo wheel

The gobo wheel provides 6 rotating gobos. The gobos supplied as standard are shown in Figure 11.

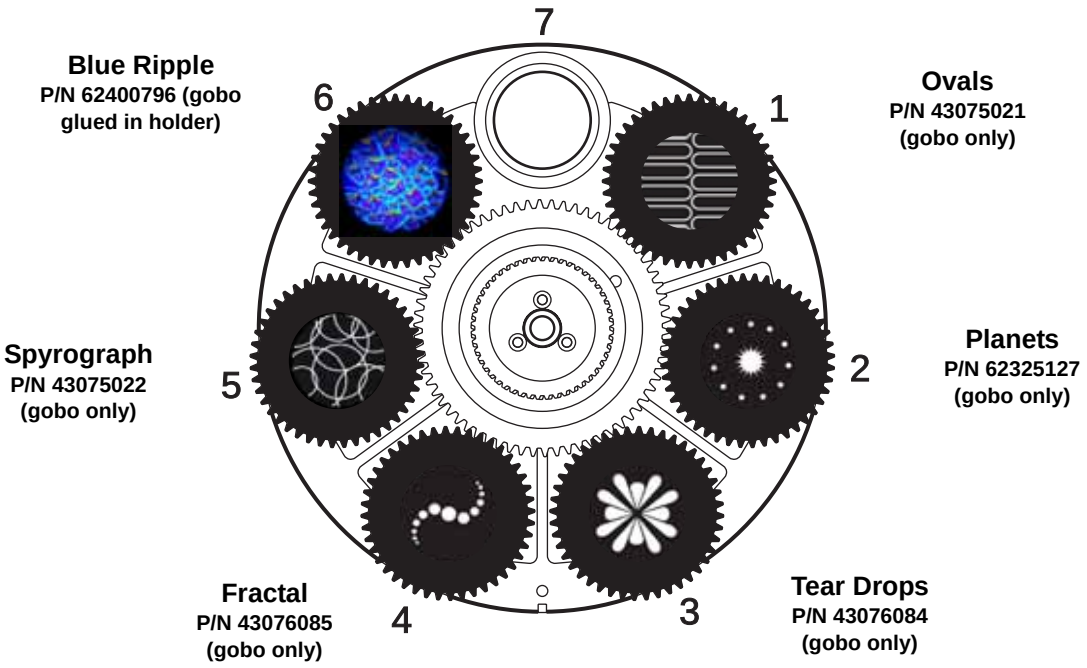

Figure 11: Gobo wheel as seen from front lens

Any of the six rotating gobos can be selected at an indexed angle, rotated, or shaken from side to side at an indexed angle or while rotating. The entire gobo wheel can also be scrolled continuously, and gobos set to music triggered gobo chase.

Focus

Focus can be adjusted from 2 m (6.5 ft.) to infinity.

Pan and tilt

The smartMAC's moving head can be panned through 600° and tilted through 247°.

Macros

Macros are pre-programmed sequences stored in the fixture's memory that can reduce the need for programming. The smartMAC has 10 pan/tilt and 10 effects macros available. Pan/tilt and effects macros are selected separately and can therefore be run in any combination.

Pan/tilt macros	Effects macros
1. Circle large CW	1. Shutter chase
2. Pan wave large CW	2. Single color bump
3. Tilt wave large CW	3. Two color bump
4. Circle small CCW	4. Single gobo bump
5. Pan wave small CCW	5. Index/rotate FX
6. Tilt wave small CCW	6. Focus sine wave
7. Large move slow CW	7. Camera flash
8. Large move slow CCW	8. Shutter fade
9. Large move fast CW	9. Gobo wheels scroll bounce
10. Large move fast CCW	10. Color scroll

Table 3. List of macros

Macro chase/staggered start feature

Each macro can be started:

- at the beginning of its sequence by selecting **1.1**, **2.1**, **3.1**, etc.
- 25% of the way through its sequence by selecting **1.2**, **2.2**, **3.2**, etc.
- 50% of the way through its sequence by selecting **1.3**, **2.3**, **3.3**, etc.
- 75% of the way through its sequence by selecting **1.4**, **2.4**, **3.4**, etc.

This feature makes it possible to run the same macro in multiple fixtures with staggered starting points (i.e. fixtures reach the start of the macro one after the other), so that the macro appears to run in a chase.

For example, if you have four smartMAC fixtures side by side and you set the first fixture to run macro **1.1**, the next fixture to run macro **1.2**, the next to run macro **1.3** and the last to run macro **1.4**, and you start all fixtures running their macro at the same time, the fixtures will run macro **1** in a chase.

Note that a regular macro chase requires that all fixtures start their macro at exactly the same time so that they reach the start of the macro at regular intervals. Macro chases are therefore primarily intended for use with DMX control, but they can be programmed in synchronized stand-alone operation.

Music trig sensitivity

The smartMAC's music trig sensor uses automatic gain control to match the fixture's sensitivity to the music beat. Adjustment is not necessary.

DMX operation

WARNING! Read “Safety Information” on page 3 before installing, powering, operating or servicing the smartMAC.

This section describes only DMX control features that require particular explanation. See “DMX protocol” on page 37 for full list of the DMX channels and values required to control the different effects. See “Effects” on page 22 for a full description of the fixture’s effects.

8- and 16-bit control

The smartMAC has two DMX operating modes, 8-bit and 16-bit. 16-bit mode uses three more DMX channels than 8-bit mode and provides all the features of 8-bit mode plus fine control of rotating gobo, pan and tilt. You can select the DMX operating mode in the PSET menu.

Where fine control is available, the main control channel sets the first 8 bits (the most significant byte or MSB), and the fine channels set the second 8 bits (the least significant byte or LSB) of the 16-bit control byte. In other words, the fine channel works within the position set by the coarse channel.

Fixture reset

If an effect loses its indexing and fails to move to programmed positions, the fixture can be reset from the controller by sending the “Reset” command on DMX channel 1.

If DMX reset is disabled in the control menu (PERS→DRES→OFF), the reset command can only be executed if color 8 is selected (DMX value 128 or 145 - 148 on channel 3) and gobo 6 is selected (DMX value 24 - 27 or 52 - 55 on channel 4).

If PERS→DRES is set to 5SEC, the reset command must be sent for 5 seconds before it is executed.

Shutter

Shutter operation is controlled on channel 1 apart from shutter fading, which is controlled on channel 2. Shutter fading provides a means of reducing light output by gradually moving the shutter in from one side to mask the beam.

Rotating gobo wheel

On channel 4, any of the six rotating gobos can be selected at an indexed angle, rotated, or shaken from side to side at an indexed angle or while rotating. The entire gobo wheel can also be scrolled continuously, and gobos set to music triggered gobo chase.

Channel 5 provides extra control of the effect selected on channel 4, allowing adjustment of indexed gobo angle and speed of continuous or music-triggered gobo rotation.

Fine control of gobo indexing angle is available on channel 5 in 16-bit mode.

Pan and tilt

Pan and tilt are controlled on channels 9 and 10 in 8-bit mode or 10 and 12 in 16-bit mode. Fine pan and tilt control are available on channels 11 and 13 in 16-bit mode.

Pan/tilt speed and effects speed channels

The pan/tilt and effects speed channels 11 and 12 in 8-bit mode or 14 and 15 in 16-bit mode provide two methods of controlling the speed of pan/tilt and effect movement: “tracking” and “vector”.

Tracking versus vector control

Important! ***Movement may be rough and unpredictable if controller fade times are combined with vector speed values.***

if you select *tracking mode*, speed is determined by the cross-fade time programmed on the controller. With this method, the controller divides a movement into tiny steps that the fixture “tracks”, or follows.

If you select *vector mode*, the fixture determines speed according to the DMX value you send on the speed channel. Vector mode therefore allows you to control the speed of scene changes on controllers without cross-faders. It can also give smoother movement, particularly at slow speeds, when using a controller that sends slow or irregular tracking updates.

If the DMX controller has variable cross-fade times, set them to zero when using vector mode.

Personality overrides

Using the pan/tilt speed channel, you can set pan and tilt to tracking mode and at the same time set the fixture’s own pan/tilt speed setting to normal or fast from the DMX controller, overriding the pan/tilt speed setting available in the fixture’s control menus.

Using the effects speed channel, you can set the effects to tracking and at the same time set shortcuts to on or off from the DMX controller, overriding the shortcuts setting available in the fixture’s control menus.

Stand-alone operation

WARNING! Read "Safety Information" on page 3 before installing, powering, operating or servicing the smartMAC.

This section describes how to program and run stand-alone light shows on the smartMAC without a DMX controller. See the SA menu under "Control menu" on page 43 for a table listing stand-alone commands. See "Effects" on page 22 for a full description of the smartMAC's effects.

In stand-alone operation, the smartMAC can play up to 100 pre-programmed scenes continuously in a loop. A smartMAC can either run a stand-alone show independently, or scene changes can be synchronized with other smartMAC fixtures.

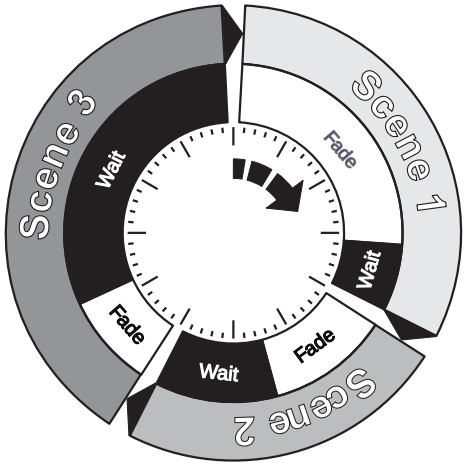

Figure 12: Scene timing

About scenes

A stand-alone light show consists of a sequence of scenes. Each scene is a particular lighting effect with predetermined effects (color, gobo, etc.) and duration.

See Figure 12. Each scene has a dynamic part – the fade – during which effects move to the scene's programmed positions, and a static part – the wait – where effects do not change.

The duration of the fade and duration of the wait must be programmed individually for each scene. The total time it takes a scene to execute is the sum of the fade and wait times.

Striking the lamp automatically in stand-alone operation

By default, the lamp is not powered on automatically when the smartMAC is powered on. If you want stand-alone operation to start automatically when power is applied, you must not only activate stand-alone operation (SA → RUN → ENA) but also activate automatic lamp on (PERS → ALON → ON) in the smartMAC*s control menu.

Programming stand-alone operation

To program a scene in the current stand-alone sequence:

1. In the control panel, select SA → PROG
2. Configure the effects in the scene in the following menus:
   - SHUT (shutter
   - COL (color)
   - GOBO (gobo selection)
   - RGBO (gobo rotation)
   - FOCU (focus)
   - PTMA (pan/tilt macros)
   - EFMA (effects macros)
   - PAN and TILT (pan and tilt positions).
3. Select a fade time using FADE and a wait time using WAIT.
4. Store the scene in your stand-alone sequence as follows:
   - Use the ADD command to save the current scene as a new scene at the end of the stand-alone sequence.
   - Use the INS command to save the current scene as a new scene at the start of the stand-alone sequence.

- Use the STOR command to save changes to the current scene. Note that the STOR command does not create a new scene. It only saves changes to a scene that has already been created using the ADD or INS commands.

You can manage the scenes you have created using the NEXT, PREV, DEL and CLR commands.

You can preview the stand-alone sequence using the VIEW command.

Programming effects in a stand-alone scene using a DMX controller

Instead of programming effects in stand-alone scenes manually via the control panel, it is possible to apply effects to the smartMAC using a DMX controller, then use the GDMX menu in the control panel to capture all the applied effects and save them in a scene in the smartMAC's stand-alone show.

To capture effects applied from a DMX controller:

1. Connect a DMX controller to the smartMAC and apply the desired effects.
2. Go to SA → PROG → GDMX → DMX → STOR in the smartMAC control menu.
3. Select ADD to add a scene with the applied effects to the end of the stand-alone sequence or INS to insert a scene with the applied effects immediately before the current scene.

As with scenes that you have programmed manually, you can use the NEXT, PREV, DEL and CLR commands to manage the scenes you have created.

Note that a stand-alone scene programmed using the DMX capture method may be slightly different to the original DMX scene. This is because effects in stand-alone scenes are slightly simplified compared to DMX. For example, gobo rotation speed can be varied with a resolution of nearly 120 values in each direction via DMX, but only slow, medium and fast speeds are available in stand-alone mode. When the smartMAC captures DMX effects, it finds the closest equivalent stand-alone effects and stores these.

Synchronized master/slave operation

If you are running multiple fixtures in stand-alone mode and the fixtures are connected on a data link, you can synchronize action so that all fixtures start their programmed shows and start fading to the next scene at the same time.

An smartMAC running a stand-alone show can perform synchronized scene changes with other smartMAC fixtures as well as Martin Architectural fixtures of the following types:

- Exterior 1200 Wash™
- Exterior 1200 Image Projector™
- Exterior 200™
- Exterior 600™
- Exterior 600 Compact™
- Inground 200 CMY™
- Inground 200 6-Color™
- FiberSource CMY150™
- Imager™
- Alien 02™
- MiniMAC Maestro™

In synchronized operation, one fixture is set as the master and the others are set as slaves. Each fixture must be programmed with its own show. When the master fades to the next scene or starts its show from the beginning again, it tells each slave fixture to fade to its next scene or start its show again. In other words, each slave fixture will run its show repeatedly in a cycle, changing scene when prompted to by the master, until the master finishes its own show and signals that all fixtures should start from the first scene once again.

If you want to keep things as simple as possible when programming synchronized operation, ensure that:

1. Every fixture has the same number of scenes.
2. Scene times are a few seconds longer on the master fixture than on slave fixtures (this will ensure that slave fixtures always have time to finish scenes before the master tells them to start the next scene).

It is important to note that the only commands transmitted by the master are scene change and show start commands. No data about the *appearance* of the scene is transmitted between fixtures.

For a more detailed explanation of synchronized operation and how advanced effects can be created by programming fixtures with a different number of scenes, see the next section.

Synchronized stand-alone operation: advanced features

Note: ***This section gives advanced information about stand-alone synchronized operation. You do not need to read it unless you need help troubleshooting unexpected stand-alone behavior or you want to program advanced synchronized light shows.***

The principles in stand-alone synchronized operation are as follows:

1. A scene contains a fade section, followed by a wait section.
2. Each fixture can be individually programmed with up to 100 scenes, and each scene can have its own individual fade and wait times.
3. Scenes are numbered from 0 to 99.
4. In synchronized operation, one master fixture issues commands to the other slave fixtures to “go to scene *xx*”, where *xx* is the scene number that the master will execute next.
5. If a slave has fewer scenes than the master, it will derive which scene to go to by dividing the number of the scene it has been commanded to go to (scene 5, for example) by the total number of scenes that the slave fixture has (4, for example) in whole numbers (no decimal places). In this example 5 divided by 4 results in 1, with 1 remainder. This remainder will be the number of the scene that the slave fixture starts - scene 1. Generally though, when a Slave fixture reaches its own last scene before the Master fixture, a “go to scene x*x*” message will result in the first scene being played.
6. If a slave has more scenes than the master calls, the last scenes in the slave will never be executed, as is the case with scene S4 in the following example.

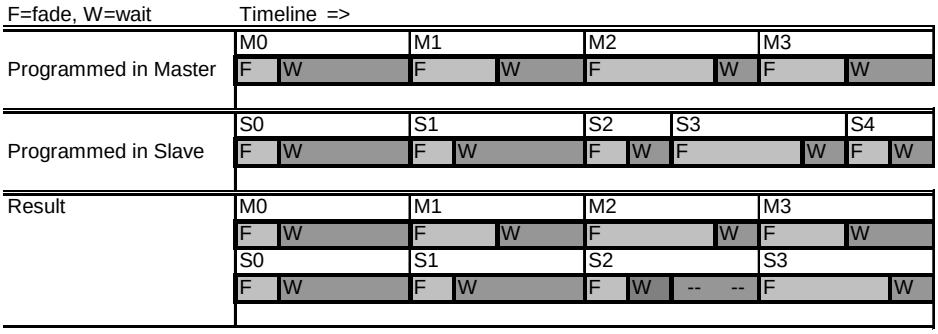

7. In synchronized operation, the wait time is determined by the master. Every slave fixture fades and waits at its own rate and then remains in the “wait” state until it receives a “start scene xx” command from the master.
8. A slave fixture will not listen for the next message from the master fixture before it has finished its current scene. This may result in a slave skipping a scene if the slave has a longer scene time than the master. Note that in the following example, the scenes in the slave run out of their programmed sequence because scenes 0 and 2 on the slave are longer than the corresponding scenes on the master.

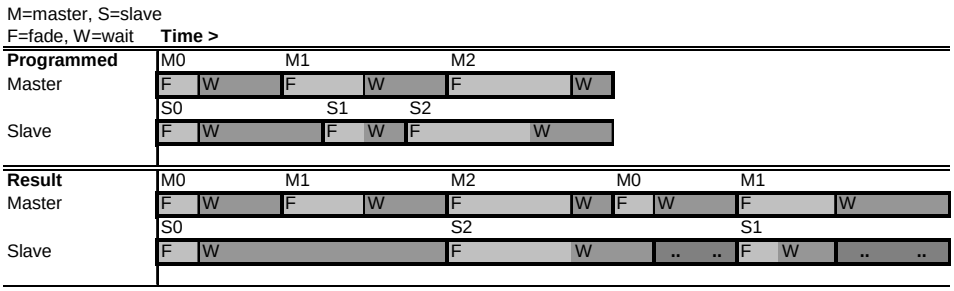

Service and maintenance

WARNING! Read "Safety Information" on page 3 before servicing the smartMAC. Disconnect the fixture from power and allow to cool for at least 30 minutes before handling or removing any cover. Wear heat-resistant gloves before opening the effects access hatch. Refer any service operation not described here to a qualified service technician.

Important! Excessive dust, smoke fluid, and particle buildup degrades performance, causes overheating and will damage the fixture. Damage caused by inadequate cleaning or maintenance is not covered by the product warranty.

As with electronic components in general, the smartMAC's PCBs are sensitive to ESD (electrostatic discharge). Take precautions to avoid ESD damage before opening the fixture. Service electronic components at a static-safe workstation only.

It is Martin policy to use the best-quality materials and coatings available to ensure optimum performance and the longest possible component lifetimes. However, optical components in all lighting fixtures are subject to wear and tear over the life of the fixture, resulting in gradual changes in color rendition of dichroic filters or the specular properties of reflectors, for example.

The extent of wear and tear depends heavily on operating conditions, maintenance and environment, so it is impossible to specify precise lifetimes for optical components. However, you will eventually need to replace optical components if their characteristics are affected by wear and tear after an extended period of use and if you require fixtures to perform within very precise optical and color parameters.

To maximize the life of the smartMAC and protect the investment it represents, clean the fixture regularly following the guidelines in this section.

Gobos

The gobos fitted to the smartMAC as standard are illustrated in Figure 11 on page 22. All gobos are interchangeable.

Custom gobos

Martin can provide additional gobos for the smartMAC. For more information, please visit the Martin web site at www.martin.com.

Glass gobos are generally the most durable, but satisfactory results can be obtained at less expense with aluminum gobos. Custom stainless steel gobos can also be used, however they can warp, losing sharpness, in a matter of hours. The useful life will depend on the gobo pattern and the projection cycle. Consult your gobo supplier for more information.

For best results, custom gobos should meet the specifications listed under "Gobos" on page 51.

Gobo orientation in the smartMAC

Most gobos must be installed facing in a certain direction in order to avoid heat damage. The orientations shown in Figure 13 are correct in most cases, but consult your Martin dealer or gobo supplier if you are in any doubt about the orientation of a specific gobo type.

Coated Glass Gobos

Focus is easiest to maintain if all coated gobos in a fixture are installed with their coatings as close as possible to the same plane of focus. However, if there is a risk of heat damage on a gobo, the first priority is normally to ensure that the more reflective side faces towards the lamp. If in doubt, install coated gobos with the more reflective side towards the lamp, or consult your Martin dealer or gobo supplier.

More reflective side towards lamp

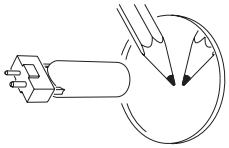

To minimize the risk of gobo overheating and damage, turn the more reflective side of a coated gobo towards the lamp.

Less reflective side away from lamp

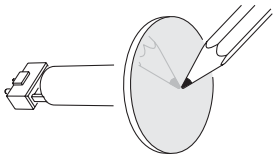

The less reflective side of a coated gobo will absorb less heat if it faces away from the lamp.

To determine which side of a gobo is coated, hold an object up to it. On the uncoated side, there is a space between the object and its reflection and the edge of the gobo can be seen when looking through the glass.

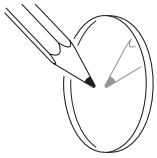

Uncoated side

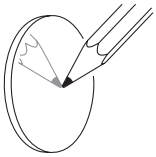

Coated side

Textured Glass Gobos

Smooth side towards lamp

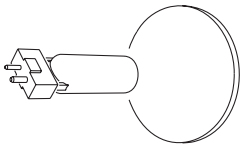

Textured side away from lamp

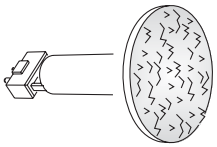

Textured glass gobos in the smartMAC give the best focus results with the smooth side towards the lamp. If in doubt, consult your Martin dealer or gobo supplier.

Metal Gobos

Reflective side towards lamp

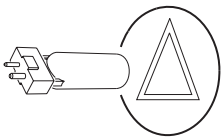

Black side away from lamp

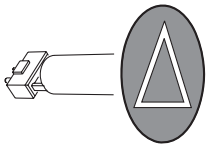

Image / text Gobos

True image towards lamp

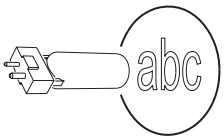

Reversed image away from lamp

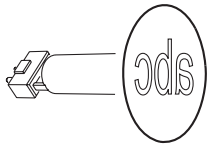

Figure 13. Correct gobo orientation

Effects access hatch and changing gobos and filters

WARNING! Hot surfaces. The smartMAC becomes hot in use. Either cut lamp power and allow to cool for 30 minutes or wear clean lint-free heat-resistant gloves before opening the access hatch.

Effects access hatch

The smartMAC effects hatch (see Figure 14) gives instant access to gobos and color filters.

Pan and tilt are disabled and EFHA appears in the fixture display as soon as the hatch is opened.

If the fixture is powered on, flipping the hatch closed and immediately open again advances one position on first the gobo wheel and then the color wheel, giving access to each gobo and filter in turn.

To close the hatch, apply firm pressure until you feel a definite click. When the hatch stays closed for more than a second, the gobo and color wheels reset to their start positions.

The hatch can be removed temporarily by unclipping it from its hinge posts, but it is a very tight fit and care must be taken to avoid damaging the clips or posts. Removal should not normally be necessary.

Note that if the hatch is not fully closed, it will be impossible to use pan and tilt or reset the fixture.

Changing gobos and filters

Wear gloves while handling optical components and use only genuine Martin parts.

Keep all optical components totally clean and free of grease. Clean them with 99.9% isopropyl alcohol, especially if you touch them with your fingers.

To gain access to the optical and effects components in the head for cleaning and service:

1. Put on clean lint-free heat-resistant gloves to protect your fingers and avoid getting oil on optical components
2. See Figure 14. Flip the effects access hatch open.

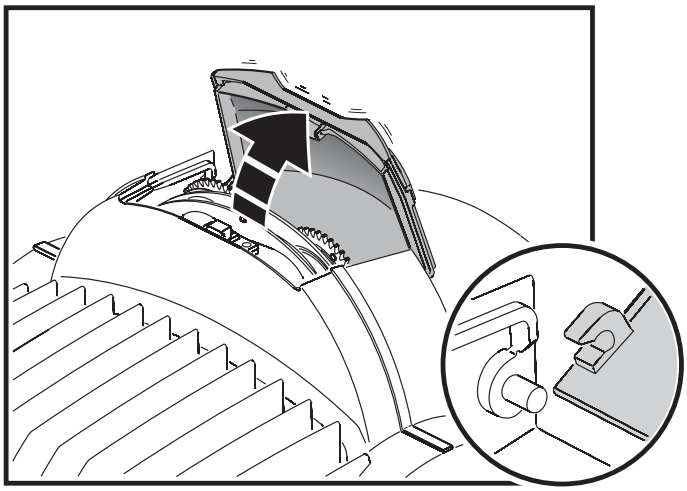

Figure 14: Effects access hatch

3. To remove a rotating gobo, pull it gently towards the lens until you can slide it up and out of the two leaf springs that secure it.
4. To install a gobo, slide the flange on the edge of the gobo down between the springs and the gobo wheel until the gobo can be located in its aperture in the gobo wheel. Check that it is held securely and that the teeth around the edge of the gobo are engaged in the cog in the center of the gobo wheel.
5. To remove a color filter, turn the gobo wheel so that the open position (arrowed in Figure 15) is in front of the filter. Gently press the filter towards the lens to release it and then grasp it by the edges and remove it. If your fingers are too large, protect the glass with a piece of paper that has been folded several times and grasp the filter with needle nose pliers.

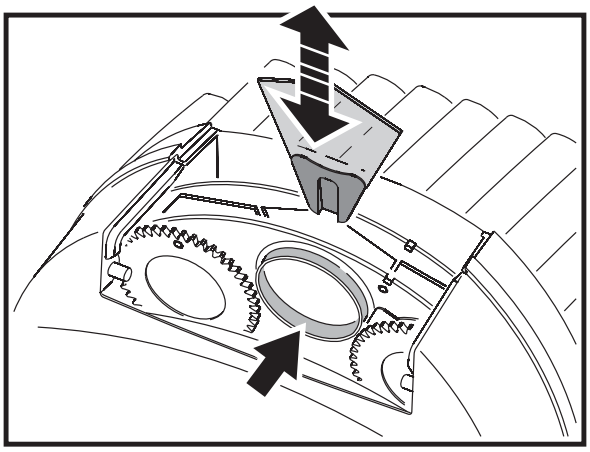

Figure 15: Changing gobos and filters

6. To install a color filter, slide it under the retention spring until it snaps into place.
7. Close the access hatch, pressing firmly until there is a definite click.

Replacing rotating gobos

Important! ***The gobo can fall out if the spring is inserted the wrong way round.***

The gobos are held in goboholders by a retention spring (see Figure 16). Note that the retention spring can only be used with gobos maximum 3 mm thick. Thicker gobos can be glued to the holder with a UV adhesive or Loctite 330 Multibond with Activator.

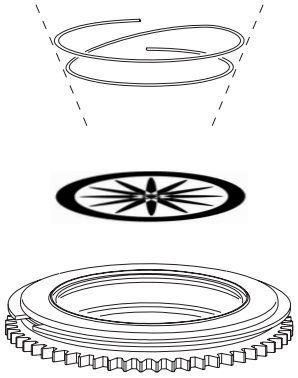

Figure 16: Rotating goboholder

To replace a rotating gobo

1. Put on clean, lint-free, heat-resistant gloves to protect your fingers and avoid getting oil on optical components
2. Remove the gobo as described on page 31.
3. With a small screwdriver or similar, unhook the end of the gobo spring furthest from the gobo and pull out the spring. Drop the gobo out of the holder.
4. Insert the new gobo in the holder with the side that faces towards the lamp facing upwards, towards the spring (see Figure 13 and Figure 16).
5. Insert the spring with the narrow end against the gobo, as shown in Figure 16. To identify the narrow end, press the spring flat: the narrow end is on the inside. Push the end of the spring in under the lip of the holder.
6. Check that the gobo is seated flush against the holder. Press the spring as flat as possible against the back of the gobo.
7. Work the rim of the goboholder under both clips on the gobo wheel until you can snap the goboholder back into position. If necessary, lever the clips away from the wheel slightly with a small screwdriver or similar tool.
8. Close the access hatch, pressing firmly until there is a definite click.

Installing the diffuser filter

The smartMAC has a filterholder for permanent filters on the front of the lamp module. A diffuser filter (P/N 41600062) is installed in it at the factory from product S/N 4074286001. Before this S/N, the filter was supplied separately with the fixture.

The filter gives a slightly more even beam (i.e. wider half-peak and one-tenth peak angles but little or no change in cutoff angle: see photometric specifications on www.martin.com for full data).

To install the diffuser filter:

1. Disconnect the fixture from power and allow to cool for at least 30 minutes.
2. See Figure 17. Remove the four quarter-turn screws from the front cover. Lift the front cover forward slightly, detach the safety wire, and remove the front cover.
3. Unscrew and disconnect the two effects multi-connectors from the top of the head.

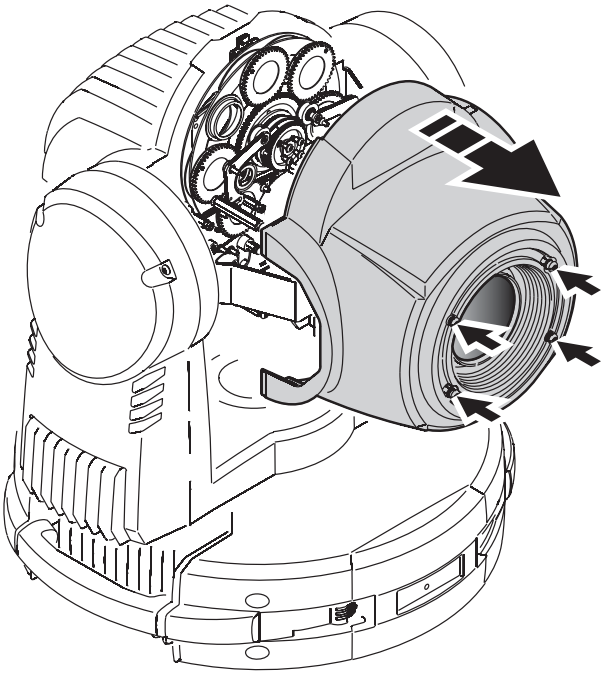

Figure 17: Removing the front cover

4. See Figure 18. Insert a screwdriver through the hole (arrowed) in the front cover mounting plate and use the manual adjustment screw to run the focus car back into the module.
5. See Figure 19. Remove the two Torx 20 screws (arrowed) from the sides of the effects module and lift the module out of the fixture.

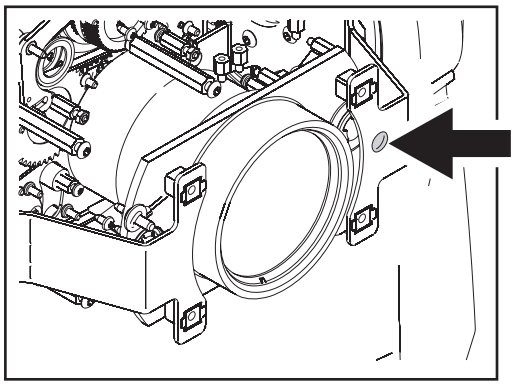

Figure 18: Focus car manual adjustment screw

6. See Figure 20. Note the position of the filterholder spring – with spring legs pushing in towards the lamp – on the lamp module front plate. Remove the four spring retaining screws and remove the spring.
7. Put on clean cotton gloves to avoid getting oil from your fingers on the filter. See Figure 20. Place the diffuser segments into the metal filterholder ring on the front of the lamp module with their shiny sides facing towards the lamp and matt, textured sides facing towards the front lens.
8. Press the filter segments together so that they form a complete disc with no gap between the segments, then reinstall the filterholder spring so that the spring legs press onto the filter.

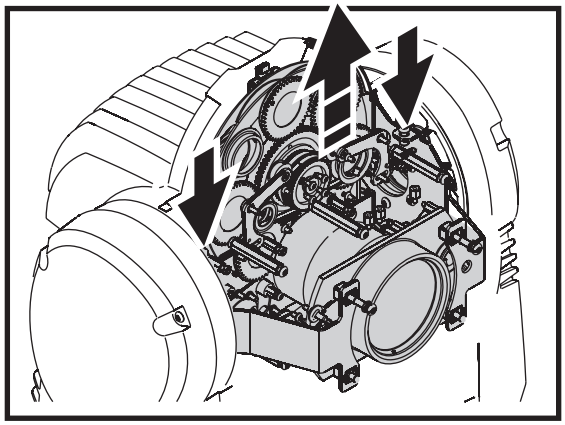

Figure 19: Removing the effects module

9. Reinstall all other components before reapplying power.

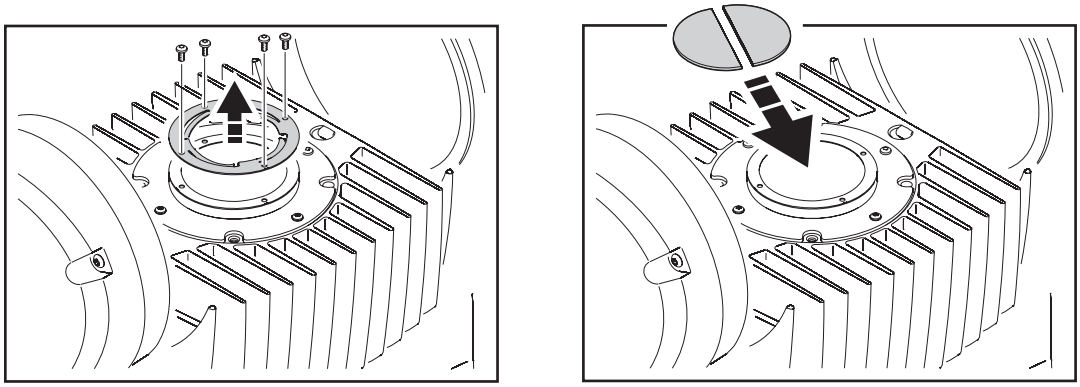

Figure 20: Filterholder and diffuser filter

Cleaning

The convection-cooled smartMAC needs less frequent cleaning than fan-cooled fixtures, but regular cleaning is still essential in order to obtain optimum fixture life and performance. Buildup of dust, dirt, smoke particles, fog fluid residues, etc. degrades the fixture's light output and cooling ability.

Cleaning schedules for lighting fixtures vary greatly depending on the operating environment. It is therefore impossible to specify precise cleaning intervals for the smartMAC. Environmental factors that may result in a need for frequent cleaning include:

- Use of smoke or fog machines.
- High airflow rates (near air conditioning vents, for example).
- Presence of cigarette smoke.
- Airborne dust (from stage effects, building structures and fittings or the natural environment at outdoor events, for example).

If one or more of these factors is present, inspect fixtures within their first 100 hours of operation to see whether cleaning is necessary. Check again at frequent intervals. This procedure will allow you to assess cleaning requirements in your particular situation. If in doubt, consult your Martin dealer about a suitable maintenance schedule.

Use care when cleaning optical components and work in a clean, well lit area. The coated surfaces are fragile and easily scratched. Do not use solvents that can damage plastic or painted surfaces.

WARNING! Disconnect from power and allow to cool before cleaning.

To clean the fixture:

1. Disconnect the fixture from power and allow it to cool for at least 30 minutes.
2. Remove the head covers.
3. Vacuum or gently blow away dust and loose particles with compressed air.
4. Remove dust from the head with a soft brush, cotton swab, vacuum, or compressed air.
5. Carefully clean the optical components. Remove smoke and other residues with cotton swabs or unscented tissues moistened with isopropyl alcohol. A commercial glass cleaner may be used, but residues must be removed with distilled water. Clean with a slow circular motion from center to edge. Dry with a clean, soft and lint-free cloth or compressed air. Remove stuck particles with an unscented tissue or cotton swab moistened with glass cleaner or distilled water. Do not rub the surface: lift the particles off with a soft repeated press.
6. Reinstall all covers before applying power

Lubrication

In general, the smartMAC does not require lubrication. However, depending on use conditions, the bushes and slider bars for the focus car may eventually require reapplication of the long-lasting teflon-based grease applied at the factory. Noise when operating the focus is a sign that lubrication is required. This operation can be carried out by a Martin service partner if necessary.

Do not lubricate plastic bushes.

Fuse replacement

DANGER! Disconnect from power before opening covers. Replace fuses with ones of the same type and rating only. Never bypass or bridge a fuse.

The smartMAC is protected by one 4.0 amp, slow-blow type main fuse located in a fuseholder next to the power input connector on the connections plate.

To replace the main fuse:

1. Disconnect the power cable from the fixture at the power input connector.
2. Use a flathead screwdriver to lever open the fuseholder and remove the fuse for testing or replacement.
3. Replace defective fuses with ones of the same type and rating only. Replacement fuses are available from Martin.
4. Reinstall the fuseholder before reapplying power.

A further 4.0 amp slow-blow fuse is located on the power PCB. This fuse must be changed by a qualified electrical technician observing appropriate safety and ESD (electrostatic discharge) precautions.

If a fuse blows repeatedly, disconnect the fixture from power immediately and consult your Martin supplier.

Firmware installation

Firmware (i.e. fixture software) updates are available from the Martin web site and can be installed via the data link with a Martin upload device.

The following are required in order to install fixture software:

- The latest version of the smartMAC firmware in the form of an MU3 file, available for download from the User Support Area of the Martin web site at http://www.martin.com/service
- The Martin Software Uploader application, version 5.0 or later, available for download from the User Support Area of the Martin web site.
- A PC running Windows 2000/XP
- A PC-DMX interface supported by the Martin Software Uploader application (Martin Universal USB/DMX Interface recommended).

Installing new fixture software

To install new software, connect a PC with the Martin Uploader application and the smartMAC fixture software to the smartMAC's DMX input connector via a Martin Universal USB/DMX Interface box or similar interface.

All the smartMACs that are powered on and connected to the DMX data link should accept the new software. There is no need to isolate smartMACs from other types of fixture on the data link.

Normal upload

A smartMAC should automatically enter software upload mode when it is connected as described above. If it does not, use UTIL→UPLD in the control menu to prepare the fixture for the upload. Carry out the upload in Auto/DMX mode as described in the Uploader application help file.

If the display and control panel are unusable because the software has become corrupted, carry out a boot mode upload (see below).

Boot mode upload

Carry out a boot mode upload only if the fixture software is totally corrupted (which is evident if the control panel does not respond when power is applied) or if the software update notes call for a boot sector update. To carry out a boot mode upload:

1. Disconnect the fixture from power.
2. Remove the right-hand side cover from the yoke to expose the main PCB (right-hand as seen from the lampholder end of the fixture with the text on the lampholder the right way up).
3. See Figure 21. Locate the 6-pin DIP-switch on the PCB and move pin 6 to **ON** (boot mode upload enable).
4. Reapply power, upload the software, and disconnect from power.
5. Move DIP-switch pin 6back to **OFF** (Normal) and reinstall the yoke side cover.

In a checksum error occurs when powering on after performing a boot mode upload, carry out a normal upload as described above.

Circuit board layout

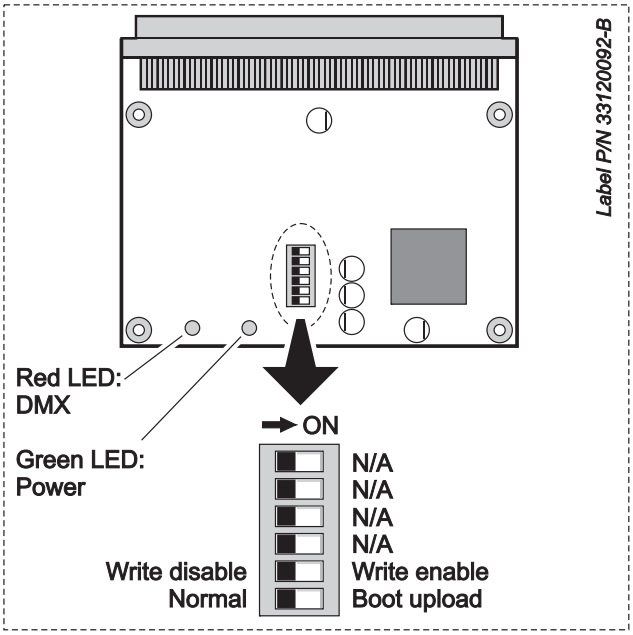

Figure 21: Main PCB and DIP switch

In normal operation, all pins on the DIP switch should be in the **OFF** position.

DMX protocol

8-bit mode	16-bit mode	DMX Value	Percent	Function	
				Shutter, strobe, reset, lamp on/off	*If **Reset fixture** is disabled under PERS → dRES in the control menu, the reset command only works if Color 8 is selected on channel 3 (cont. or scroll) and Gobo 6 is selected (rot. or indexed) on channel 4. A five-second delay for the **Reset fixture** command can be set in the control menu under PERS → dRES. **If **DMX Lamp Off** is disabled in PERS → DLOF in he control menu, a lamp off command can only be executed if Color 8 (cont. or scroll) is selected on channel 3 and Gobo 6 (rot. or indexed) is selected on channel 4.
1	**1**	0 - 14	0 - 5	Shutter closed	
		15 - 29	6 - 11	Shutter open	
		30 - 39	12 - 15	Shutter fade in	
		40 - 49	16 - 19	Shutter fade out	
		50 - 72	20 - 28	Strobe, fast → slow	
		73 - 79	29 - 31	Shutter open	
		80 - 99	31 - 39	Opening pulse, fast → slow	
		100 - 119	40 - 47	Closing pulse, fast → slow	
		120 - 123	47 - 48	Shutter open	
		124 - 127	49 - 50	Music triggered shutter	
		128 - 147	50 - 58	Random strobe, fast	
		148 - 167	58 - 65	Random strobe, medium	
		168 - 187	66 - 73	Random strobe, slow	
		188 - 190	74 - 75	Shutter open	
		191 - 193	75 - 76	Random opening pulse, fast	
		194 - 196	76 - 77	Random opening pulse, slow	
		197 - 199	77 - 78	Random closing pulse, fast	
		200 - 202	78 - 79	Random closing pulse, slow	
		203 - 207	80 - 81	Shutter open	
		208 - 217	82 - 85	Reset fixture*	
		218 - 227	85 89	Shutter open	
		228 - 237	89 - 93	Lamp on	
		238 - 247	93 - 97	Shutter open	
		248 - 255	97 - 100	Lamp power off (hold for 5 sec.)**	
2	**2**	0 - 255	0 - 100	**Shutter fading** Shutter closed → open	

Table 4: DMX Protocol

8-bit mode	16-bit mode	DMX Value	Percent	Function
				Color wheel position and rotation, music trig color chase
				Continuously scrolling color wheel positions
		0	0	Open (white)
		1-15	0 - 6	Open → Color 1
		16	6	Color 1 (Blue)
		17 - 31	7 - 12	Color 1 → Color 2
		32	13	Color 2 (Green)
		33 - 47	13 - 18	Color 2 → Color 3
		48	19	Color 3 (Orange)
		49 - 63	19 - 25	Color 3 → Color 4
		64	25	Color 4 (Yellow)
		65 - 79	25 - 31	Color 4 → Color 5
		80	31	Color 5 (Pink)
		81 - 95	32 - 37	Color 5 → Color 6
		96	38	Color 6 (Magenta)
		97 - 111	38 - 44	Color 6 → Color 7
		112	44	Color 7 (Congo)
		113 - 127	44 - 50	Color 7 → Color 8
		128	50	Color 8 (Red)
		129 - 143	51 - 56	Color 8 → Open
		144	56	Open
3	**3**			**Stepped scroll (indexed) color wheel positions**
		145 - 148	57 - 58	Color 8 (Red)
		149 - 152	59 - 60	Color 7 (Congo)
		153 - 156	60 - 61	Color 6 (Magenta)
		157 - 160	62 - 63	Color 5 (Pink)
		161 - 164	63 - 64	Color 4 (Yellow)
		165 - 168	65 - 66	Color 3 (Orange)
		169 - 172	66 - 67	Color 2 (Green)
		173 - 176	68 - 69	Color 1 (Blue)
		177 - 180	69 - 71	Open
				Continuous color wheel rotation
		181 - 203	71 - 79	CW, fast → slow
		204 - 207	80	Color wheel stop
		208 - 230	81 - 90	CCW, slow → fast
				Music triggered color chase
		231 - 235	91 - 92	Fast
		236 - 239	93 - 94	Medium
		240 - 243	94 - 95	Slow
				Random color chase
		244 - 247	96 - 97	Fast
		248 - 251	97 - 98	Medium
		252 -255	99 - 100	Slow

Table 4: DMX Protocol

8-bit mode	16-bit mode	DMX Value	Percent	Function
				Rotating gobo selection and shake
				Indexing (set position on channel 5; set fine position on channel 6 in 16 bit mode)
		0 - 3	0 - 1	Open gobo
		4 - 7	2 - 3	Gobo 1 (Ovals)
		8 - 11	3 - 4	Gobo 2 (Planets)
		12 - 15	5 - 6	Gobo 3 (Tear Drops)
		16 - 19	6 - 7	Gobo 4 (Fractal)
		20 - 23	8 - 9	Gobo 5 (Spyrograph)
		24 - 27	9 - 11	Gobo 6 (Blue Ripple)
				Rotation (set rotation speed on channel 5)
		28 - 31	11 - 12	Open gobo
		32 - 35	13 - 14	Gobo 1 (Ovals)
		36 - 39	14 - 15	Gobo 2 (Planets)
		40 - 43	16 - 17	Gobo 3 (Tear Drops)
		44 - 47	17 - 18	Gobo 4 (Fractal)
		48 - 51	19 - 20	Gobo 5 (Spyrograph)
		52 - 55	20 - 22	Gobo 6 (Blue Ripple)
				Indexed gobo shake (set indexed gobo position on channel 5)
4	**4**	56 - 66	22 - 26	Gobo 1 shake, slow → fast
		67 - 77	26 - 30	Gobo 2 shake, slow → fast
		78 - 88	31 - 35	Gobo 3 shake, slow → fast
		89 - 99	35 - 39	Gobo 4 shake, slow → fast
		100 - 110	39 - 43	Gobo 5 shake, slow → fast
		111 - 121	44 - 47	Gobo 6 shake, slow → fast
				Rotating gobo shake (set rotation speed on channel 5)
		122 - 132	48 - 52	Gobo 6 shake, slow → fast
		133 - 143	52 - 56	Gobo 5 shake, slow → fast
		144 - 154	56 - 60	Gobo 4 shake, slow → fast
		155 - 165	61 - 65	Gobo 3 shake, slow → fast
		166 - 176	65 - 69	Gobo 2 shake, slow → fast
		177 - 187	69 - 73	Gobo 1 shake, slow → fast
				Continuous gobo wheel scroll (set gobo rotation speed on channel 5)
		188 - 215	74 - 84	CW slow → fast
		216 - 243	85 - 95	CCW fast → slow
				Music trigged gobo chase
		244 - 247	96 - 97	Fast
		248 - 251	97 - 98	Medium
		252 - 255	99 - 100	Slow
				Gobo rotation (select gobo on channel 4)
				Indexed position
		0 - 255	0 - 100	0 - 395°
				Continuous rotation direction and speed
		0 - 2	0 - 1	No rotation
5	**5**	3 - 121	1 - 47	CW, slow → fast
		122 - 240	48 - 94	CCW, fast → slow
		241 - 243	95 - 95	No rotation
				Music trigged gobo rotation
		244 - 247	96 - 97	Fast
		248 - 251	97 - 98	Medium
		252 - 255	99 - 100	Slow
-	**6**	0 - 255	0 - 100	**Gobo rotation, fine**
6	**7**	0 - 255	0 - 100	**Focus** Infinity → 2 meters

Table 4: DMX Protocol

8-bit mode	16-bit mode	DMX Value	Percent	Function
				Pan/tilt macros
		0 - 5	0 - 2	No Macro
		6 - 11	2 - 4	Macro 1.1
		12 - 17	5 - 7	Macro 1.2
		18 - 23	7 - 9	Macro 1.3
		24 - 29	9 - 11	Macro 1.4
		30 - 35	12 - 14	Macro 2.1
		36 - 41	14 - 16	Macro 2.2
		42 - 47	16 - 18	Macro 2.3
		48 - 53	19 - 21	Macro 2.4
		,54 - 59	21 - 23	Macro 3.1
		60 - 65	24 - 25	Macro 3.2
		66 - 71	26 - 28	Macro 3.3
		72 - 77	28 - 30	Macro 3.4
		78 - 83	31 - 33	Macro 4.1
		84 - 89	33 - 35	Macro 4.2
		90 - 95	35 - 37	Macro 4.3
		96 - 101	38 - 40	Macro 4.4
		102 - 107	40 - 42	Macro 5.1
		108 - 113	42 - 44	Macro 5.2
		114 - 119	45 - 47	Macro 5.3
7	**8**	120 - 125	47 - 49	Macro 5.4
		126 - 131	49 - 51	Macro 6.1
		132 - 137	52 - 54	Macro 6.2
		138 - 143	54 - 56	Macro 6.3
		144 - 149	56 - 58	Macro 6.4
		150 - 155	59 - 61	Macro 7.1
		156 - 161	61 - 63	Macro 7.2
		162 - 167	64 - 65	Macro 7.3
		168 - 173	66 - 68	Macro 7.4
		174 - 179	68 - 70	Macro 8.1
		180 - 185	71 - 73	Macro 8.2
		186 - 191	73 - 75	Macro 8.3
		192 - 197	75 - 77	Macro 8.4
		198 - 203	78 - 80	Macro 9.1
		204 - 209	80 - 82	Macro 9.2
		210 - 215	82 - 84	Macro 9.3
		216 - 221	85 - 87	Macro 9.4
		222 - 227	87 - 89	Macro 10.1
		228 - 233	89 - 91	Macro 10.2
		234 - 239	92 - 94	Macro 10.3
		240 - 245	94 - 96	Macro 10.4
		246 - 255	96 - 100	Reserved (no effect)

Table 4: DMX Protocol

8-bit mode	16-bit mode	DMX Value	Percent	Function
8	9			**Effects macros**
		0 - 5	0 - 2	No Macro
		6 - 11	2 - 4	Macro 1.1
		12 - 17	5 - 7	Macro 1.2
		18 - 23	7 - 9	Macro 1.3
		24 - 29	9 - 11	Macro 1.4
		30 - 35	12 - 14	Macro 2.1
		36 - 41	14 - 16	Macro 2.2
		42 - 47	16 - 18	Macro 2.3
		48 - 53	19 - 21	Macro 2.4
		,54 - 59	21 - 23	Macro 3.1
		60 - 65	24 - 25	Macro 3.2
		66 - 71	26 - 28	Macro 3.3
		72 - 77	28 - 30	Macro 3.4
		78 - 83	31 - 33	Macro 4.1
		84 - 89	33 - 35	Macro 4.2
		90 - 95	35 - 37	Macro 4.3
		96 - 101	38 - 40	Macro 4.4
		102 - 107	40 - 42	Macro 5.1
		108 - 113	42 - 44	Macro 5.2
		114 - 119	45 - 47	Macro 5.3
		120 - 125	47 - 49	Macro 5.4
		126 - 131	49 - 51	Macro 6.1
		132 - 137	52 - 54	Macro 6.2
		138 - 143	54 - 56	Macro 6.3
		144 - 149	56 - 58	Macro 6.4
		150 - 155	59 - 61	Macro 7.1
		156 - 161	61 - 63	Macro 7.2
		162 - 167	64 - 65	Macro 7.3
		168 - 173	66 - 68	Macro 7.4
		174 - 179	68 - 70	Macro 8.1
		180 - 185	71 - 73	Macro 8.2
		186 - 191	73 - 75	Macro 8.3
		192 - 197	75 - 77	Macro 8.4
		198 - 203	78 - 80	Macro 9.1
		204 - 209	80 - 82	Macro 9.2
		210 - 215	82 - 84	Macro 9.3
		216 - 221	85 - 87	Macro 9.4
		222 - 227	87 - 89	Macro 10.1
		228 - 233	89 - 91	Macro 10.2
		234 - 239	92 - 94	Macro 10.3
		240 - 245	94 - 96	Macro 10.4
		246 - 255	96 - 100	Reserved (no effect)
9	10			**Pan**
		0 - 255	0 - 100	Full left → full right (128 = neutral)
-	11			**Pan, fine (least significant byte)**
		0 - 255	0 - 100	Left → right
10	12			**Tilt**
		0 - 255	0 - 100	Full tilt → full opposite tilt (128 = neutral)
-	13			**Tilt, fine (least significant byte)**
		0 - 255	0 - 100	Tilt → opposite tilt
11	14			**Pan/tilt speed**
		0 - 2	0 - 1	Tracking mode
		3 - 245	1 - 95	Vector mode, fast → slow
		246 - 248	96 - 97	Tracking mode, PTSP = NORM (overrides speed set via control menu)
		249 - 251	97 - 98	Tracking mode, PTSP = FAST (overrides speed set via control menu)
		252 - 255	99 - 100	Blackout while moving

Table 4: DMX Protocol

8-bit mode	16-bit mode	DMX Value	Percent	Function
				Effects speed
				Shutter, focus
		0 - 2	0 - 1	Tracking mode
		3 - 245	1 - 96	Vector mode, fast → slow
		246 - 251	96 - 98	Tracking mode
		252 - 255	99 - 100	Vector mode, maximum speed
				Color
		0 - 2	0 - 1	Tracking mode
		3 - 245	1 - 96	Vector mode, fast → slow
		246 - 248	96 - 97	Tracking mode, SCUT = OFF (overrides ON if set via control menu)
12	**15**	249 - 251	98	Tracking mode, SCUT = ON (overrides OFF if set via control menu)
		252 - 255	99 - 100	Blackout while moving
				Gobo selection
		0 - 245	0 - 1	Normal (no blackout)
		246 - 248	1 - 96	Normal, SCUT = OFF (overrides ON if set via control menu)
		249 - 251	96 - 98	Normal, SCUT = ON (overrides OFF if set via control menu)
		252 - 255	99 - 100	Blackout while moving
				Indexed gobo rotation (if indexed position selected on channel 4)
		0 - 2	0 - 1	Tracking mode
		3 - 245	1 - 96	Vector mode, fast → slow
		246 - 251	96 - 98	Tracking mode
		252 - 255	99 - 100	Blackout while moving

Table 4: DMX Protocol

Control menu

Menu	Item	Options	Notes (Default settings in bold print)
ADDR		1 – 501	DMX address (default address = **1**). Limited to 498 in 16-bit DMX mode.
PSET		8BT	8-bit DMX mode
		16BT	**16-bit DMX mode with 2-channel (coarse and fine) control of gobo rotation, pan and tilt**
PATI	SWAP	OFF	**Normal pan and tilt control**
		ON	Map DMX pan control to tilt channel and vice versa
	PINV	OFF	**Normal pan control: left → right**
		ON	Reverse DMX pan control: right → left
	TINV	OFF	**Normal tilt control: up → down**
		ON	Reverse DMX tilt control, down → up
PTSP		NORM	**Normal pan/tilt speed**
		FAST	Optimize pan/tilt movement for speed (gives slightly reduced smoothness)
EFSP		NORM	**Normal effects speed**
		FAST	Optimize effects movement for speed (gives slightly reduced smoothness)
		PTSS	Pan/tilt speed slave: effects speed copies the pan/tilt speed that has been set via the control menu or via DMX
SA	RUN	ENA	Enable stand-alone execution
		DIS	**Disable stand-alone execution**
	SAE	SIN	**Single fixture mode**
		MAS	Master mode
		SLA	Synchronized (slave) mode
	PROG	SHUT	Shutter: open / close / fade in / fade out / strobe fast / strobe medium / strobe slow / random fast / random medium / random slow / music trig
		COL	Color: open / colors 1 - 8 / rotation direction and speed / music trig / random fast - slow
		GOBO	Gobos: open / gobos 1 - 6 indexed position / gobos 1 - 6 rotation / gobos 1 - 6 shake, speed / gobo wheel rotation direction and speed / music trig speed
		RGBO	Rotating gobo speed
		FOCU	Focus
		PTMA	Pan/tilt macros 1.1 - 10.4
		EFMA	Effects macros 1.1 - 10.4
		PAN	Pan
		TILT	Tilt
		FADE	Fade time hours / minutes / seconds
		WAIT	Wait time hours / minutes / seconds
		NEXT	Call up next scene
		PREV	Call up previous scene
		ADD	Add scene to the end of the sequence
		STOR	Save changes to current scene.
		INS	Insert scene before current scene
		DEL	Delete current scene
		CLR	Delete all scenes in sequence
		VIEW	Preview sequence
		GDMX	Get DMX (load the scene currently being sent by DMX into stand-alone memory – see Table 6 on page 46 for details).

Table 5: Control menu

Menu	Item	Options	Notes (Default settings in bold print)
PERS	DLOF	OFF	**Disable DMX lamp off command**
		ON	Enable DMX lamp off command
	DRES	OFF	Disable reset via DMX
		ON	**Enable reset via DMX**
		5SEC	Enable reset via DMX when reset command is held for 5 seconds
	ALON	OFF	**No automatic lamp strike**
		ON	Lamp strikes automatically within 90 seconds of power on
		DMX	Lamp strikes if DMX signal is present, powers off again after 15 minutes if no DMX signal is received.
	SCUT	OFF	Effect wheels do not cross open
		ON	**Effect wheels move shortest distance (even if this means crossing open position)**
	SLLW	OFF	**Lamp life warnings off**
		ON	Lamp life warnings on, lamp shuts down when expected lamp life has been reached
	EXLL	0 - 9900	Set expected lamp life in hours
	MODE	NORM	Normal mode: pan, tilt and effects set to normal speed
		SLNT	'Silent' mode: pan, tilt and effects set to slow speed (overrides other control menu settings)
	DISP	ON	Display on permanently
		2 M	**Display auto-sleeps and menu returns to top level after 2 mins.**
		10M	Display auto-sleeps and menu returns to top level after 10 mins.
		2 ME	Display auto-sleeps and menu returns to top level after 2 mins., display is reactivated by error messages
		10ME	Display auto-sleeps and menu returns to top level after 10 mins., display is reactivated by error messages
	DINT		Display intensity 100% - 10% (**default = 50%**)
	DERR	OFF	Disable message display if an error is detected
		ON	**Enable message display if an error is detected**
DFSE	FACT	LOAD	Return all settings (except calibrations) to factory defaults *NB: can take up to 2 minutes to complete!*
	CUS1, CUS2, CUS3	LOAD	Load custom configuration
		SAVE	Save current custom configuration
	RSTC	SURE	Reset all resettable counters
INFO	TIME→HRS	TOTL	Total hours of operation since manufacture
		RSET	Hours of operation since counter reset (to reset counter, display counter and press [Up] for 5 secs.)
	TIME→L HR	TOTL	Total hours of operation since manufacture
		RSET	Hours of operation since counter reset (to reset counter, display counter and press [Up] for 5 secs.)
		EXLL	Expected lamp life value (default = 3000 hours, can be reset in PERS→ EXLL menu)
	L ST	TOTL	Total number of lamp strikes since manufacture
		RSET	Number of lamp strikes since counter reset (to reset counter, display counter and press [Up] for 5 secs.)
	TEMP	HEAD	Head temperature
		PCB	PCB temperature
	VER	x.x.x	CPU firmware version
DMXL	RATE		DMX transmission speed in packets per second
	QUAL		Percent of packets received without errors
	STCO		Decimal value of the DMX start code
	SHUT_EFSP		DMX value (0 - 255) received on each channel

Table 5: Control menu

Menu	Item	Options	Notes (Default settings in bold print)
MAN	RST		Reset fixture
	L ON		Strike lamp
	LOFF		Power lamp off
	SHUT	OPEN	Open shutter
		CLOS	Close shutter
		STRF	Fast shutter strobe
		STRM	Medium shutter strobe
		STRS	Slow shutter strobe
	FASH		Shutter fade
	COL	OPEN	Select open (white) position on color wheel
		C 1 – C8	Select color 1 - color 8 on color wheel
		CW F	Clockwise rotation, fast
		CCWF	Counterclockwise rotation, fast
		CW M	Clockwise rotation, medium
		CCWM	Counterclockwise rotation, medium
		CW S	Clockwise rotation, slow
		CCWS	Counterclockwise rotation, slow
		MU F	Color wheel music trig, fast
		MU M	Color wheel music trig, medium
		MU S	Color wheel music trig, slow
		RNDF	Random color, fast
		RNDM	Random color, medium
		RNDS	Random color, slow
	GOBO	OPEN	Select open (no gobo) position on gobo wheel
		G 1I – G6I	Indexed gobo selection 1-6
		G 1R – G6R	Rotating gobo selection 1-6
		G 1RS – G6RS	Rotating gobo with shake selection 1-6
		CW F	Clockwise gobo wheel rotation, fast
		CCWF	Counterclockwise gobo wheel rotation, fast
		CW M	Clockwise gobo wheel rotation, medium
		CCWM	Counterclockwise gobo wheel rotation, medium
		CW S	Clockwise gobo wheel rotation, slow
		CCWS	Counterclockwise gobo wheel rotation, slow
		MU F	Gobo music trig, fast
		MU M	Gobo music trig, medium
		MU S	Gobo music trig, slow
	RGBO	0 – 255	Gobo indexing angle / rotation speed (if indexed gobo or rotating gobo selected in MAN → GOBO)
	EFMA	0 – 255	Effect macros 1.1 - 10.3
	PTMA	0 – 255	Pan/tilt macros 1.1 - 10.3
	FOCU	0 – 255	Focus, infinity → near
	PAN	0 – 255	Pan left → right
	TILT	0 – 255	Full tilt → Full opposite tilt
TSEQ		RUN	Run test of all effects (for service use only)

Table 5: Control menu

Menu	Item	Options	Notes (Default settings in bold print)
UTIL To access this menu, hold [Enter] pressed for a few seconds	FEBA	ON	Enable pan/tilt position feedback/correction system
		OFF	Disable pan/tilt feedback (this setting is not saved when fixture is reset)
	ADJ		Effects adjustment menu (for service use: for full details of this menu, see “Adjustment submenu” on page 47)
	CAL (OF = offset)	S OF	Shutter calibration
		C OF	Color wheel calibration
		G OF	Rotating gobo wheel calibration
		GROF	Rotating gobo calibration
		F OF	Focus calibration
		P OF	Pan calibration
		T OF	Tilt calibration
	DFOF	SURE	Load factory effects calibration settings
	PCBT	SURE	PCB test: for service use only
	UPLD	SURE	Manually set fixture to receive software upload

Table 5: Control menu

DMX capture menu

The DMX capture menu in SA → PROG → GDMX contains the following options:

Item	Item	item	Options	Notes
GDMX	DMX	STOR	ADD	Add the scene currently being sent by DMX to the end of the stand-alone sequence.
			INS	Insert the scene currently being sent by DMX before the current scene.

Table 6: DMX capture menu

Control panel shortcuts

The following shortcuts are available using the buttons in the smartMAC control panel:

Shortcut	Function
Hold [Menu] and press [Up]	Resets fixture
Hold [Menu] and [Enter] during fixture reset	Freezes pan and tilt
Hold [Up] and press [Down]	Invert display
Hold [Enter] and press [Up]	Power lamp on
Hold [Enter] and press [Down]	Power lamp off

Table 7: Control panel shortcuts

Adjustment submenu

The UTIL→ADJ menu is for use by service technicians when performing adjustments.

Item	Options		Notes
RST			Reset fixture
L ON			Strike lamp
LOFF			Douse lamp
HEAD	TEST		Run test sequence on all effects. For use by service technicians only
	SHUT	ADJ	Set shutter to adjustment position
		CLOS	Close shutter
		OPEN	Open shutter
		STRS	Slow strobe
		STRM	Medium strobe
		STRF	Fast strobe
	COL	ON S	Color wheel at sensor position
		OPEN	Color wheel at open position
		C1 - C8	Select color filter 1 - 8
		CW S _ CW F	Color wheel rotation clockwise slow - fast
	GOBO	ON S	Gobo wheel at sensor position
		OPEN	Gobo wheel at open position
		G1 - G6	Select gobo 1 - 6
		CW S _ CW F	Gobo wheel rotation clockwise slow - fast
	GOBR	ON S	Gobo at sensor position
		CW S _ CW F	Gobo rotation clockwise slow - fast
	FOCU	NEAR	Focus to near position
		FAR	Focus to far position
PATI	NEUT		Pan and tilt neutral positions
	PNTD		Pan neutral, tilt down
	PNTU		Pan neutral, tilt up
	PLTN		Pan left, tilt neutral
	PRTN		Pan right, tilt neutral
	PLTD		Pan left, tilt down
	PRTU		Pan right, tilt up

Table 8: Adjustment submenu

Display messages

Message	Appears when...	What to do
RST (Reset)	... the fixture is indexing effects at startup.	Wait for reset to complete.
SRST (Serial reset)	... the fixture has received a reset command via DMX.	Wait for reset to complete. You can set PERS→DRES to OFF to prevent accidental DMX reset commands.
▩ ▩ ▩ ▩ or ****	...there is no communication between the control panel and motherboard (this display appears briefly when powering the fixture on).	Check fuses. Check cable and connectors between control panel and motherboard. Reinstall fixture software. Contact Martin service if problem continues.
CSER (Check-sum error)	...a fixture software (firmware) upload is unsuccessful.	Repeat the upload. Contact Martin service personnel if problem continues.
LTCO (Lamp temperature cutoff) YTCO (Yoke temperature cutoff)	...one of the sensors is reporting temperature above maximum. Power to the lamp is shut down.	Ensure free airflow around fixture. Clean fixture. Check that ambient temperature does not exceed max. permitted level. Contact Martin service personnel if problem continues.
HOT	...the lamp is too hot to strike.	Allow the lamp to cool for 8 minutes before attempting to restrike.
COLD	...the fixture is below the minimum temperature for the lamp to strike.	Leave the fixture powered on for a while to generate a little internal heat. Increase the ambient temperature.
LAEX (Lamp explosion)	...the fixture has entered lamp explosion mode because it has detected a lamp failure. Pan and tilt are locked and DMX control is disabled.	Check lamp. Pan and tilt are released and DMX control is re-enabled when power is cut, then reapplied.
LLW (Lamp lifetime warning)	...the lamp is within 200 hours of the end of its lifetime. The Service warning light will light yellow.	Replace lamp.
LERR	...the lamp has exceeded its lifetime or there is a lamp error (no light from lamp although power is applied). If the lamp has exceeded its lifetime, lamp power will be shut down, the flashing LLW message in the display will alternate with LERR, and the Service warning indicator light will light red.	
EFHA	...the effects hatch is open and power is applied.	If you do not need access to effects, close the effects hatch to restore normal operation. If this message appears while you are trying to reset the fixture, close the effects hatch fully and start the reset again. Note that the effects hatch must be firmly clipped into the fully closed position.

Table 6: Display messages

Message	Appears when...	What to do
MERR (Memory error)	...the EEPROM memory cannot be read.	Reset fixture. If a pan/tilt error is displayed when you attempt to reset the fixture, check that the effects hatch is fully closed. Upload new fixture software. Contact Martin service personnel if problem continues.
OPER (Onboard programming error)	....there is a software programming error.	
RAME (RAM error)	....there is a RAM error.	
COER (Color wheel error) G 1ER (Gobo wheel error)	...there is a malfunction in the color wheel or gobo wheel positioning system.	
FBEP (Feedback error pan) FBET (Feedback error tilt) FBER (Feedback error pan/tilt)	...the pan and/or tilt correction systems cannot correct a loss of step (or there is a malfunction in the pan/tilt monitoring circuit such as a defective sensor). After a time-out, the head stops in a random position.	
PAER (Pan time-out) TIER (Tilt time-out) FOER (Focus time-out)	...there is a malfunction in the position indexing circuit for pan, tilt or focus. After the time-out, the fixture will establish a mechanical stop and continue to work, although calibration will be imprecise.	
HTER (Head temperature error) YTER (Yoke temperature error)	...there is a malfunction in one of the temperature sensing circuits.	
DRE 1 - DRE 7 (Driver error, drivers 1 - 7)	...one or more motor drivers fail.	
DPER (Display programming error)	...there is a display error.	

Table 6: Display messages

Troubleshooting

Problem	Probable cause(s)	Remedy
Fixture is completely dead.	No power to fixture.	Check power and connections.
	Fuse blown.	Disconnect fixture from power. Check fuses and replace.
One or more fixtures resets correctly but responds erratically or not at all to the controller.	Fault on data link.	Inspect connections and cables. Correct poor connections. Repair or replace damaged cables.
	Data link not terminated.	Insert termination plug in output connector of the last fixture on the link.
	Incorrect fixture DMX addressing.	Check addressing on fixture and controller. Check fixture is set to correct DMX mode.
	One of the fixtures is defective and is disturbing data transmission on the link.	Unplug XLR in and out connectors and connect them directly together to bypass one fixture at a time until normal operation is regained. Have faulty fixture serviced by Martin service technician.
	XLR pin-out on fixtures does not match (pins 2 and 3 reversed).	Install a phase-reversing cable between the fixtures or swap pins 2 and 3 in the fixture that behaves erratically.
Pan and tilt freeze and FIBER and EFHA messages are displayed during reset.	The reset cannot be completed because the effects hatch is not fully closed.	Close the effects hatch and start the reset again.
Time-out error after fixture reset.	Effect requires mechanical adjustment.	Disable effects feedback (see page 20). Contact Martin for service.
Fixture displays CSER when powered on.	A checksum error has occurred.	Upload new software using the normal upload procedure. Upload new software using the boot mode upload procedure. Contact Martin for service if problem persists.
Mechanical effect loses position.	Mechanical train requires cleaning, adjustment, or lubrication.	Contact Martin for service.
No light output.	Lamp faulty or burnt out	Disconnect fixture and replace lamp.
Light output abnormally low.	Lamp faulty or at end of service life.	Disconnect fixture and replace lamp.
Lamp cuts out intermittently.	Fixture is too hot.	Ensure free airflow around fixture. Clean fixture. Check that ambient temperature does not exceed max. permitted level. If problem persists, contact Martin for service.

Table 7: Troubleshooting

Specifications

Physical

Length	387 mm (15.2 in.)
Width	352 mm (13.9 in.)
Height	448 mm (17.6 in.), head straight up
Weight	21 kg (46.3 lbs.)

Lamp

Type	150 W discharge
Fitted as standard	Philips MSD 150/2
Color temperature	8500 K
CRI (Color rendering index)	70
Average lifetime	3000 hours
Hot restrike	No
Socket	G12
Ballast	Magnetic
Approved alternative lamp	Philips CDM-SA/T 150W/942

Dynamic Effects

Color wheel	8 interchangeable color filters + open, indexing and continuous scroll
Rotating gobo wheel	6 interchangeable gobos + open, indexing, continuous gobo rotation & scroll, shake
Shutter	Strobe effect 2 - 9 Hz, pulse effects, instant open and blackout, shutter fading
Focus	2 m (6.6 ft.) to infinity
Pan	600°
Tilt	257°

Control and Programming

Control options	DMX, stand-alone, synchronized (master/slave)
DMX channels	12/15
Setting and addressing	Control panel with LED display
16-bit control	Rotating gobo indexing, pan and tilt
Movement control options	Tracking and vector
Protocol	USITT DMX512-A
Receiver	RS-485
Firmware update	Serial upload via DMX link

Construction

Color(s)	Black or white
Housing	UV-resistant fiber-reinforced composite
Reflector	Glass, cold light
Protection rating	IP 20

Gobos

Outside diameter	27.9 mm (1.1 in.) +0/- 0.3 mm (0.01 in.)
Maximum image diameter	23 mm (0.9 in.)
Maximum thickness	1.8 mm (0.1 in.)
Recommended glass	High-temperature Borofloat or better with dichroic or enhanced aluminum coating
Recommended metal	Aluminum (steel for temporary use only)

Installation

Mounting points	2 pairs of 1/4-turn locks
Orientation	Any
Minimum distance to illuminated surfaces	250 mm (9.8 in.)
Minimum distance to combustible materials	100 mm (3.9 in.) from head, no min. distance from base

Connections

AC power input	3-pin IEC
DMX data in/out	3-pin and 5-pin locking XLR

Electrical

AC power . . . . . 100-120/200-240 V nominal, 50/60 Hz
Power supply unit. . . . . User-reconfigurable voltage and frequency settings
Main fuses . . . . . 4.0 AT (slow blow)

Typical Power and Current

100 V, 50 Hz. . . . . 229 W, 2.4 A, PF 0.967
100 V, 60 Hz. . . . . 226 W, 2.3 A, PF 0.980
120 V, 60 Hz. . . . . 230 W, 2.2 A, PF 0.897
208 V, 60 Hz. . . . . 209 W, 1.1 A, PF 0.947
230 V, 50 Hz. . . . . 216 W, 1.0 A, PF 0.951
240 V, 50 Hz. . . . . 215 W, 1.0 A, PF 0.937
Measurements made at nominal voltage. Allow for a deviation of +/- 10%.

Thermal

Cooling. . . . . Convection
Maximum ambient temperature (Ta max.) . . . . . 40° C (104° F)
Maximum surface temperature, steady state, Ta=40° C . . . . . 120° C (248° F)
Total heat dissipation (calculated, +/- 10%) . . . . . 785 BTU/hr.

Acoustic

Sound power level . . . . . .27.5 dBA, steady state, lamp on, effects static, Ta=20°C (68° F), test conditions ISO 3743-2:1994

Approvals

EU safety . . . . . EN 60598-1, EN 60598-2-17
EU EMC . . . . . EN 55 015, EN 55 103, EN 61 000
US safety . . . . . ANSI/UL 1573
Canadian safety . . . . . CAN/CSA E60598-1, CAN/CSA-E598-2-17

Included Items

Diffusion filter (installed) . . . . . P/N 41600062
Philips MSD 150/2 lamp (installed) . . . . . P/N 97010117
Quick-release mounting bracket, smartMAC . . . . . P/N 62406107
3 m power cable, angled 3-pin IEC . . . . . P/N 11501029
User manual . . . . . P/N 35000208

Accessories

Philips CDM-SA/T 150 W lamp . . . . . P/N 97010111
Wash lens kit, black . . . . . P/N 91610034
Wash lens kit, white . . . . . P/N 91610035
Quick-release mounting bracket . . . . . P/N 62406107
G-clamp . . . . . P/N 91602003
Half-coupler clamp. . . . . P/N 91602005
Quick trigger clamp . . . . . P/N 91602007
Omega bracket with quarter-turn fasteners . . . . . P/N 91602001
T-shaped omega bracket with quarter-turn fasteners . . . . . P/N 91602008
Safety wire, universal, 50 kg safe work load . . . . . P/N 91604003
DMX cable, STP, 1 pair + shield, IEC/UL-CL, 1 m . . . . . P/N 91611242
DMX cable, STP, 1 pair + shield, IEC/UL-CL, 2 m . . . . . P/N 91611243
DMX cable, STP, 1 pair + shield, IEC/UL-CL, 5 m . . . . . P/N 91611244
DMX cable, STP, 1 pair + shield, IEC/UL-CL, 10 m . . . . . P/N 91611245
DMX cable, STP, 1 pair + shield, IEC/UL-CL, 20 m . . . . . P/N 91611246

Spare parts

Philips MSD 150/2 lamp . . . . . P/N 97010117
4 AT main fuse . . . . . P/N 05020014
Diffusion filter . . . . . P/N 41600062

Ordering Information

smartMAC™, black, in cardboard box . . . . . P/N 90231000
smartMAC™, white, in cardboard box . . . . . P/N 90231030
smartMAC™, black, in double flightcase,
includes two T-shaped omega brackets per fixture . . . . . P/N 90231001

Specifications subject to change without notice. For the latest product specifications, see www.martin.com

Disposing of this product

Martin™ products are supplied in compliance with Directive 2002/96/EC of the European Parliament and of the Council of the European Union on WEEE (Waste Electrical and Electronic Equipment), as amended by Directive 2003/108/EC, where applicable.

Help preserve the environment! Ensure that this product is recycled at the end of its life. Your supplier can give details of local arrangements for the disposal of Martin products.

www.martin.com • Olof Palmes Allé 18 • 8200 Aarhus N • Denmark
Tel: +45 8740 0000 • Fax +45 8740 0010