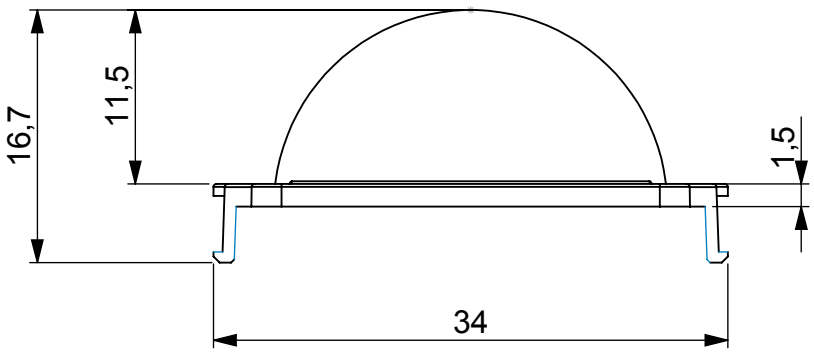

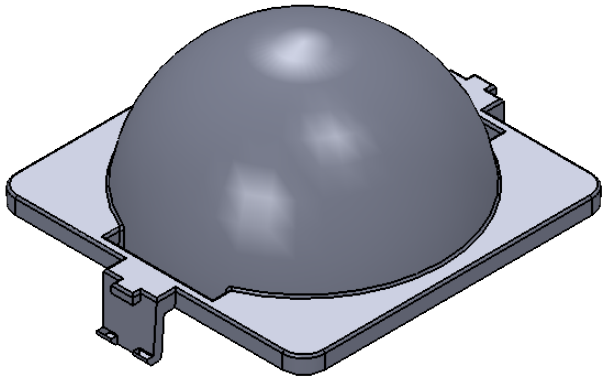

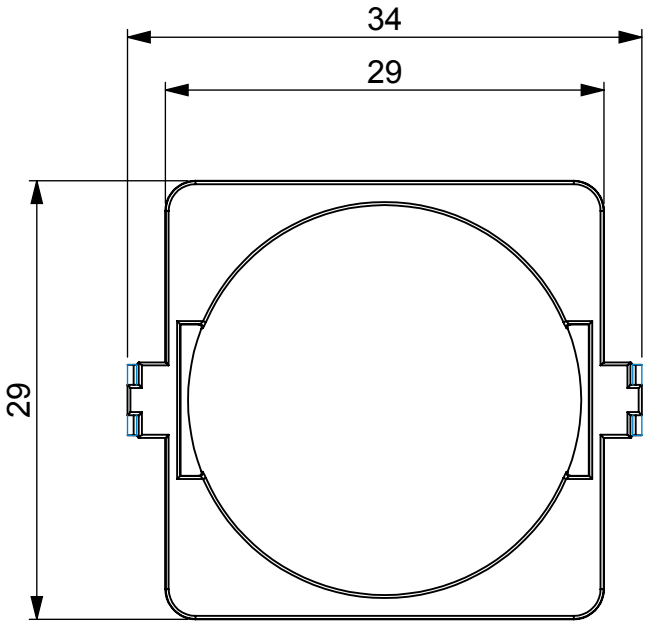

Rev.	Date	Resp.	CO no. / Comment
A			

Martin by HARMAN	First used in		Material Material <not specified>		
Item to be			General linear tolerance		
Item to be			General angular tolerance		
Item to be		Color		Format A4	Scale 2:1	Unit mm
Description Diffuser dome for VC-Dot 4				Item no.-Rev.	

© 2017 Martin Professional ApS | Confidential | Martin™ General Technical Specification apply to this item