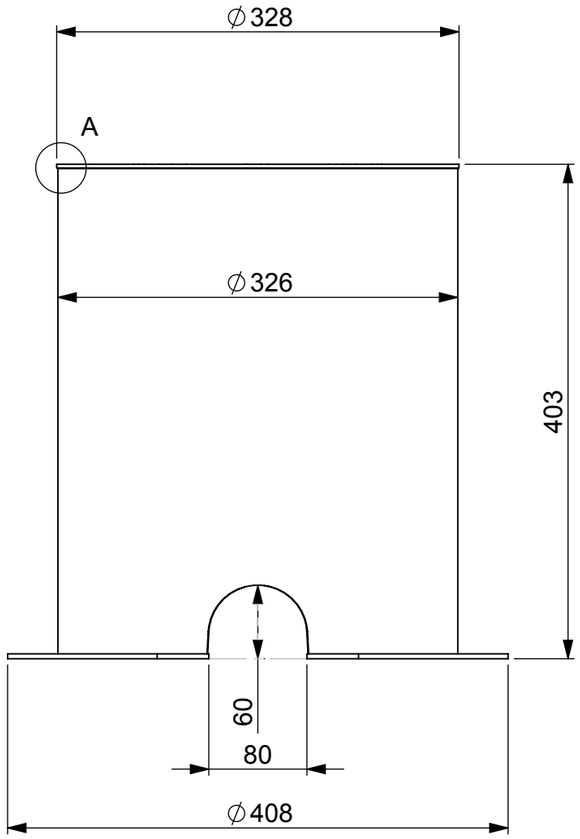

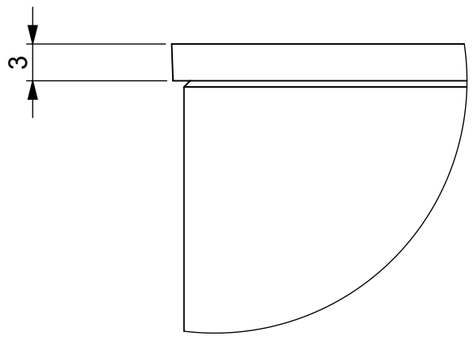

DETAIL A
SCALE 2 : 1

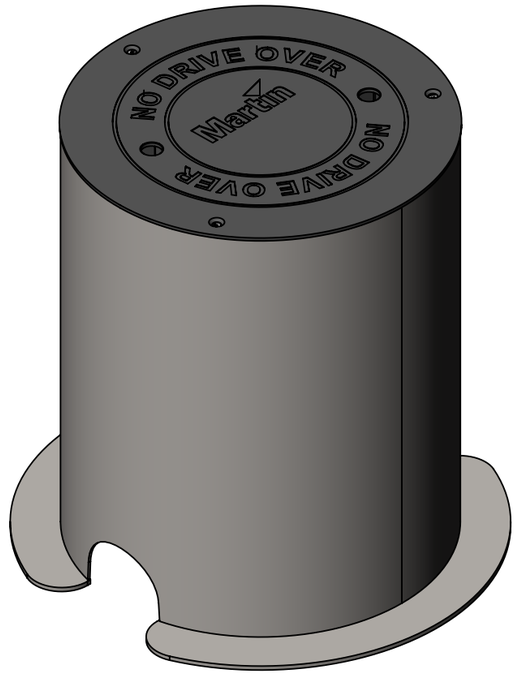

Rev.	Date	Resp.	CO no. / Comment

Martin by HARMAN	First used in	Material
Item to be		General linear tolerance
Item to be		General angular tolerance
Item to be	Color	Format A3 / Scale 1:10 / Unit mm

Description (Model in view Installation sleeve Beveled)

Item no.-Rev.

Exterior 400 Inground-Installation sleeve BEVELED (PDF)

© 2017 Martin Professional ApS Confidential

Martin™ General Technical Specification apply to this item