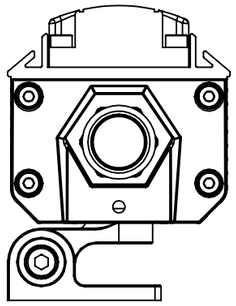

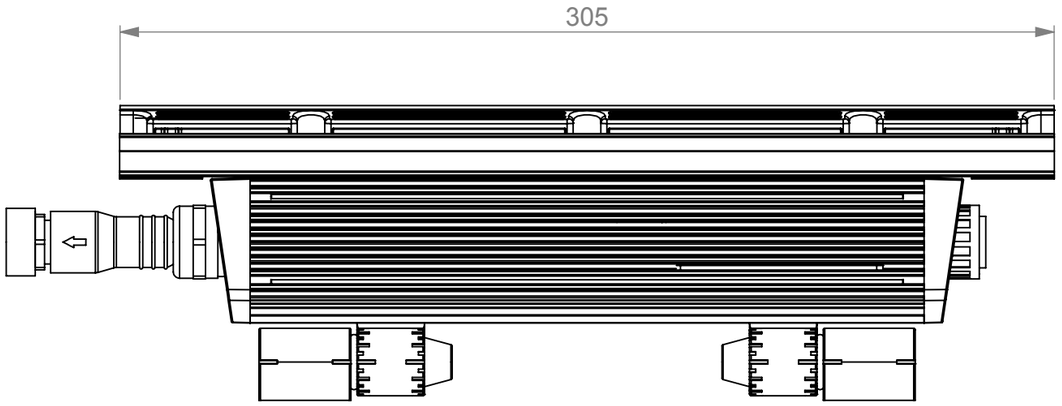

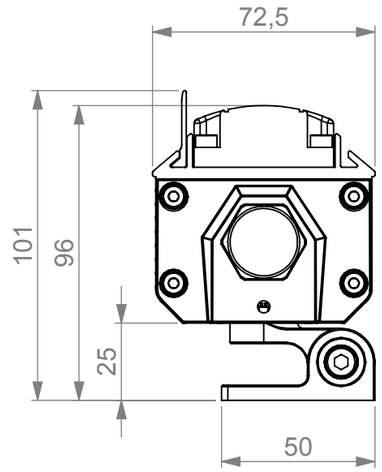

Mounted with
Glare shield (left side)

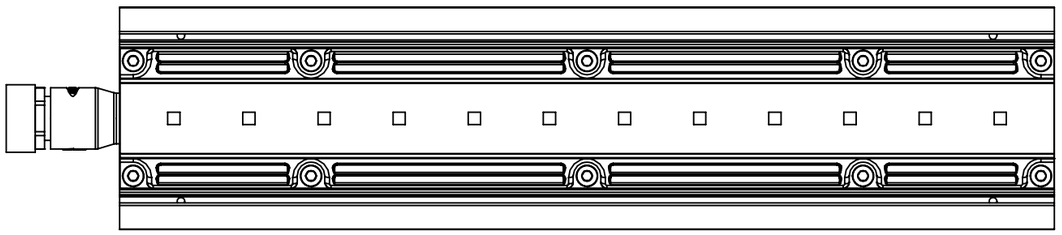

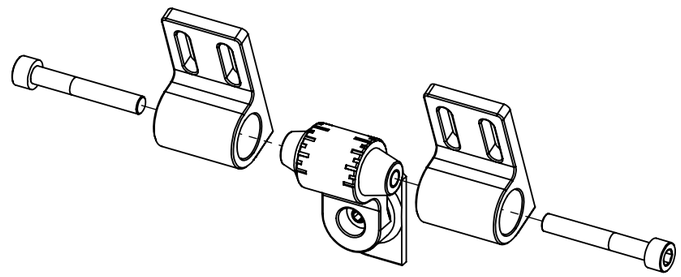

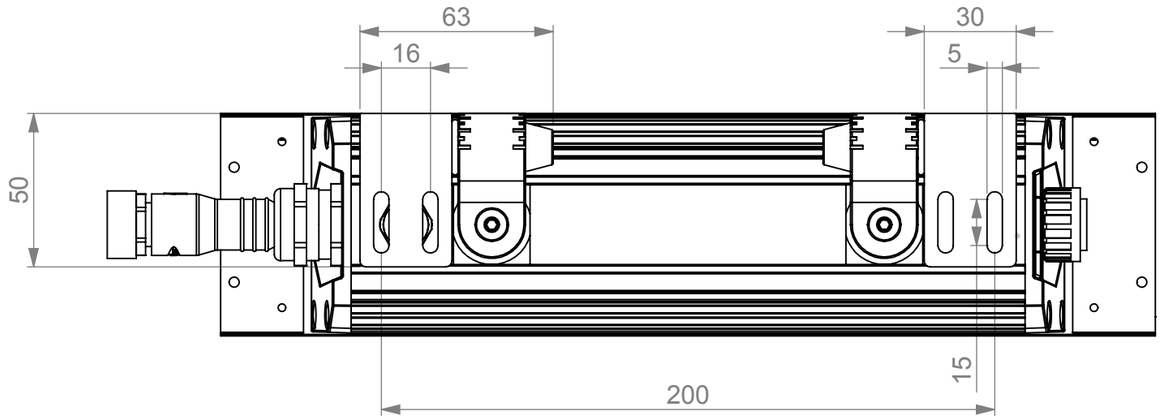

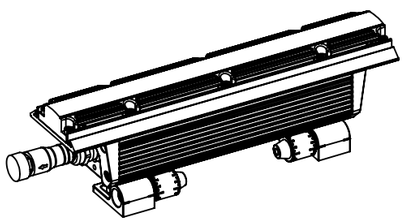

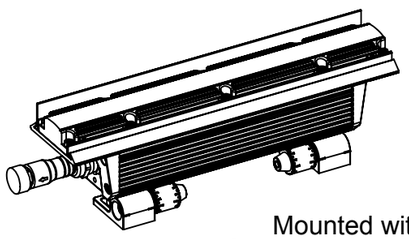

Mounted with
Glare shield (left side)

SCALE 1:5

Rev.	Date	Resp.	CO no. / Comment
B	07.01.2019	Itousgaard	
A	12.03.2018		First release

Martin by HARMAN	First used in		Material	
Item to be			General linear tolerance	
Item to be			General angular tolerance	
Item to be	Color	Format A3	Scale 1:2	Unit mm
Description: Exterior Linear 300 RGBW / 320 CTC Graze			Item no.-Rev.	

© 2017 Martin Professional ApS Confidential

Martin™ General Technical Specification apply to this item