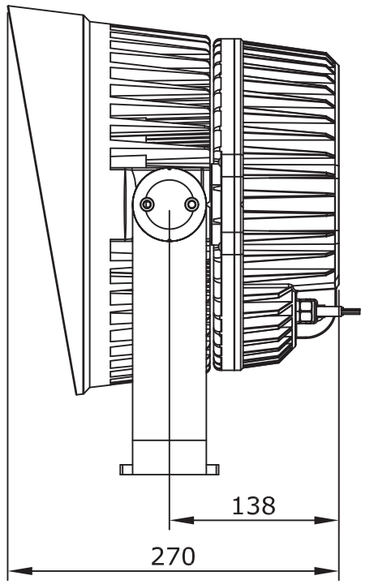

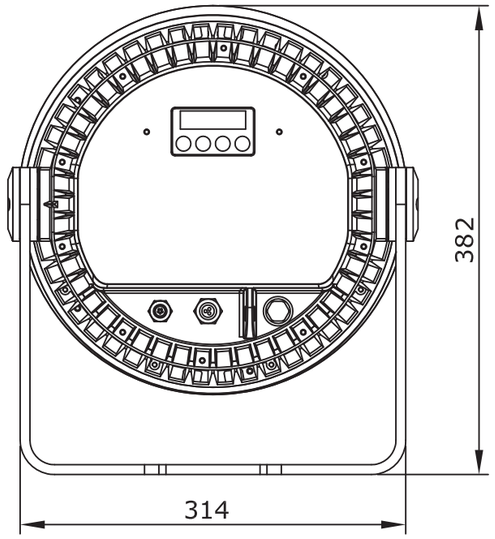

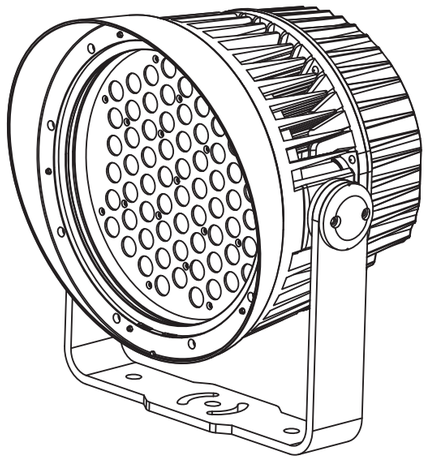

Exterior Wash 200/220

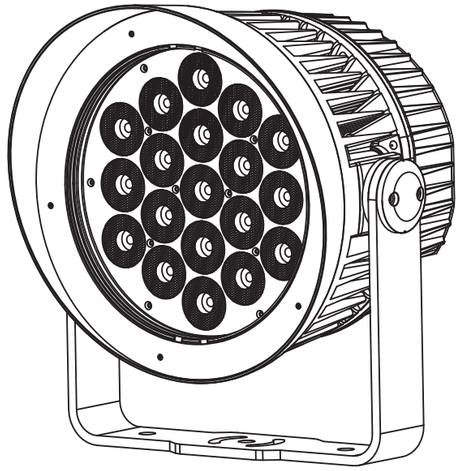

Exterior Wash 210

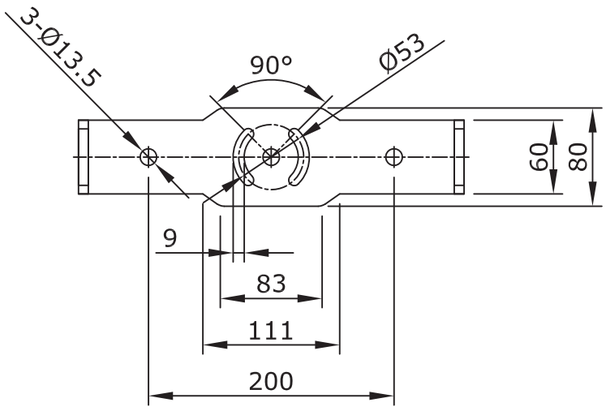

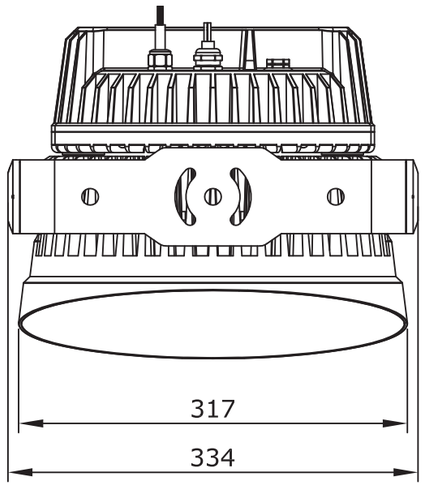

Rev.	Date	Resp.	CO no. / Comment
A	24.09.2018	rd_lto	First release

Martin by HARMAN

First used in

Material

Item to be

General linear tolerance

Item to be

General angular tolerance

Item to be	Color	Format	Scale	Unit
		A3	1:5	mm

Description

Exterior Wash 200 Series

Item no.-Rev.

© 2018 Martin Professional ApS Confidential

Martin™ General Technical Specification apply to this item