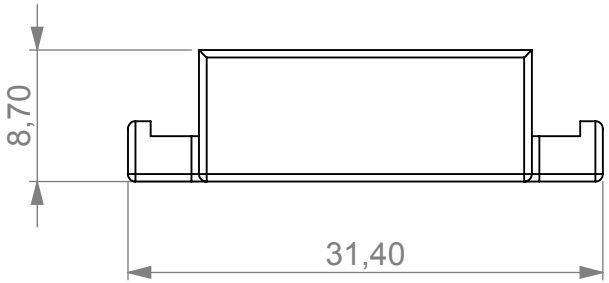

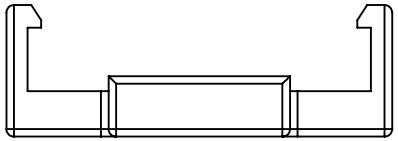

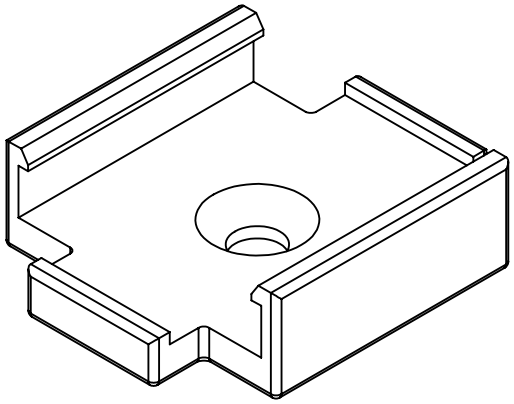

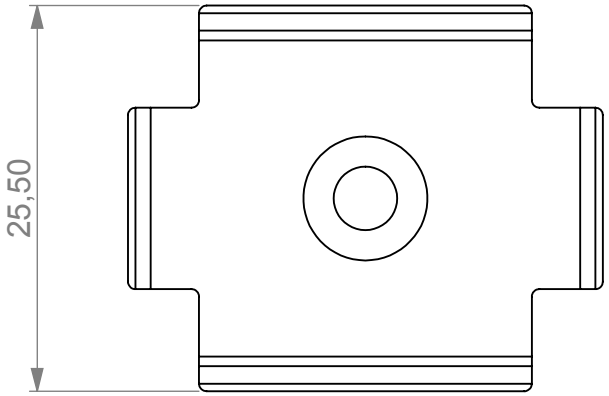

Rev.	Date	Resp.	CO no. / Comment
A	17.01.2013	rd_lto	DWG with dimensions

Martin™	First used in		Material		
Item to be			General linear tolerance		
Item to be			General angular tolerance		
Item to be		Color		Format A4	Scale 2:1	Unit mm
Description (Model in view VC-Dot 1 Clip) VC-Dot 1 clip				Item no.-Rev.	

© 2012 Martin Professional A/S | Confidential | Martin™ General Technical Specification apply to this item