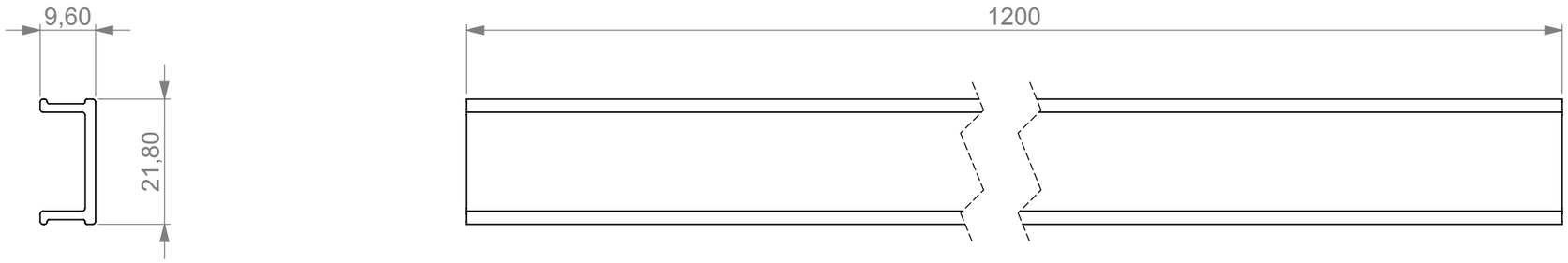

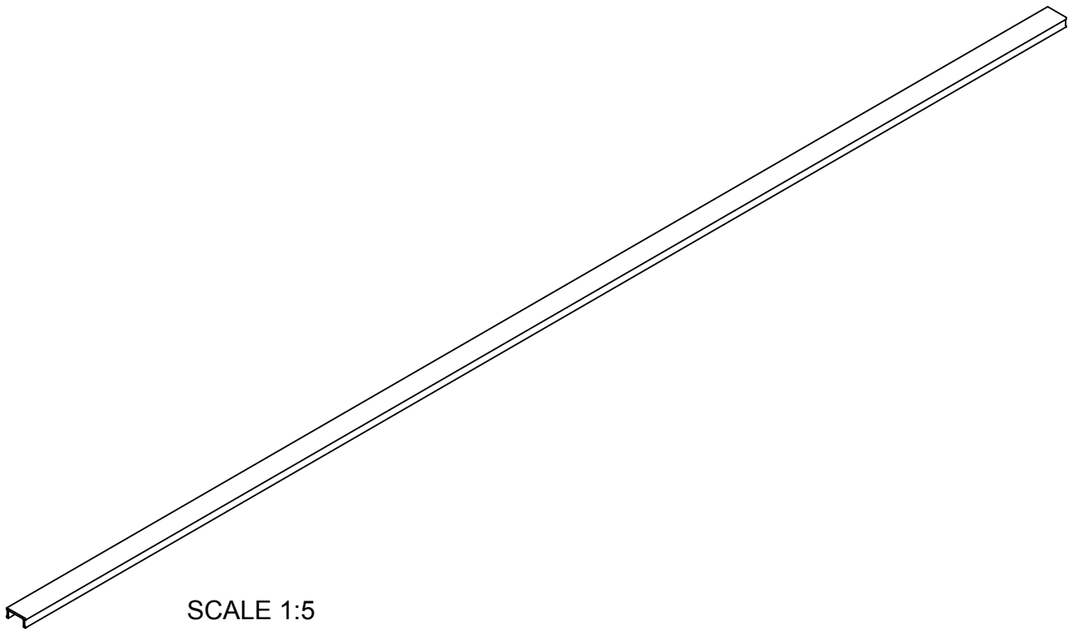

SCALE 1:5

Rev.	Date	Resp.	CO no. / Comment
A	05.04.2013	JVE	First release

Martin by HARMAN	First used in	Material
Item to be		General linear tolerance
Item to be		General angular tolerance

Item to be	Color	Format	Scale	Unit
		A3	1:2	mm

Description

VC-Dot 1 Plastic Profile Cover 1.2m

Item no.-Rev.

© 2013 Martin Professional A/S Confidential

Martin™ General Technical Specification apply to this item