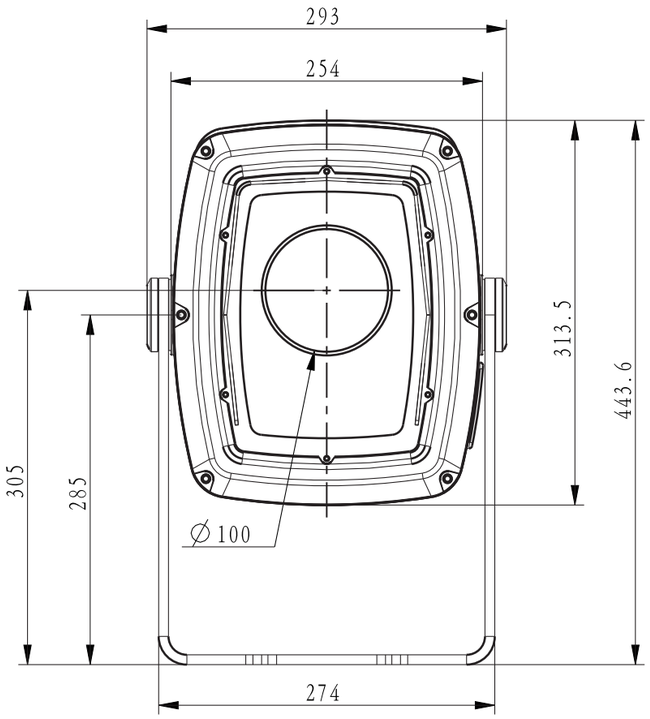

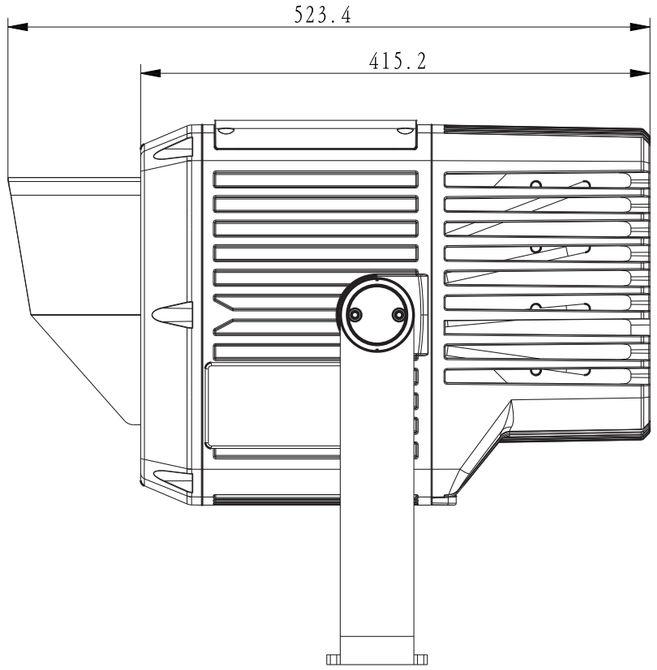

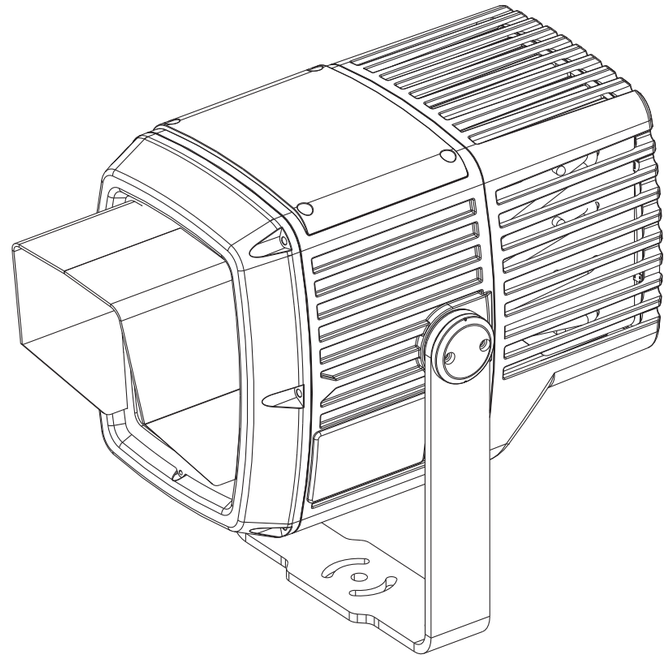

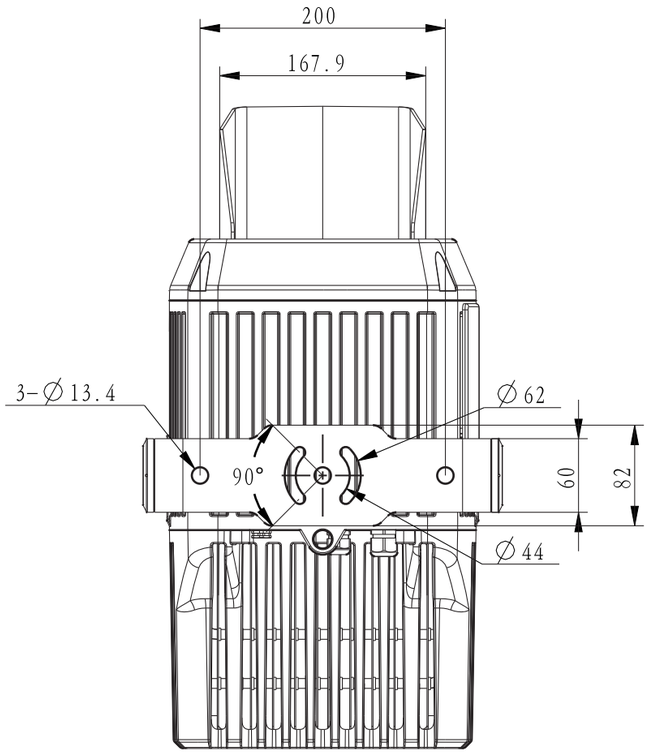

Rev.	Date	Resp.	CO no. / Comment
A	30.05.2016		

Martin by HARMAN	First used in		Material	
Item to be			General linear tolerance	
Item to be			General angular tolerance	
Item to be	Color	Format A3	Scale 1:5	Unit mm
Description: Exterior Projection 500 with Glareshield			Item no.-Rev.	

© 2016 Martin Professional ApS Confidential

Martin™ General Technical Specification apply to this item