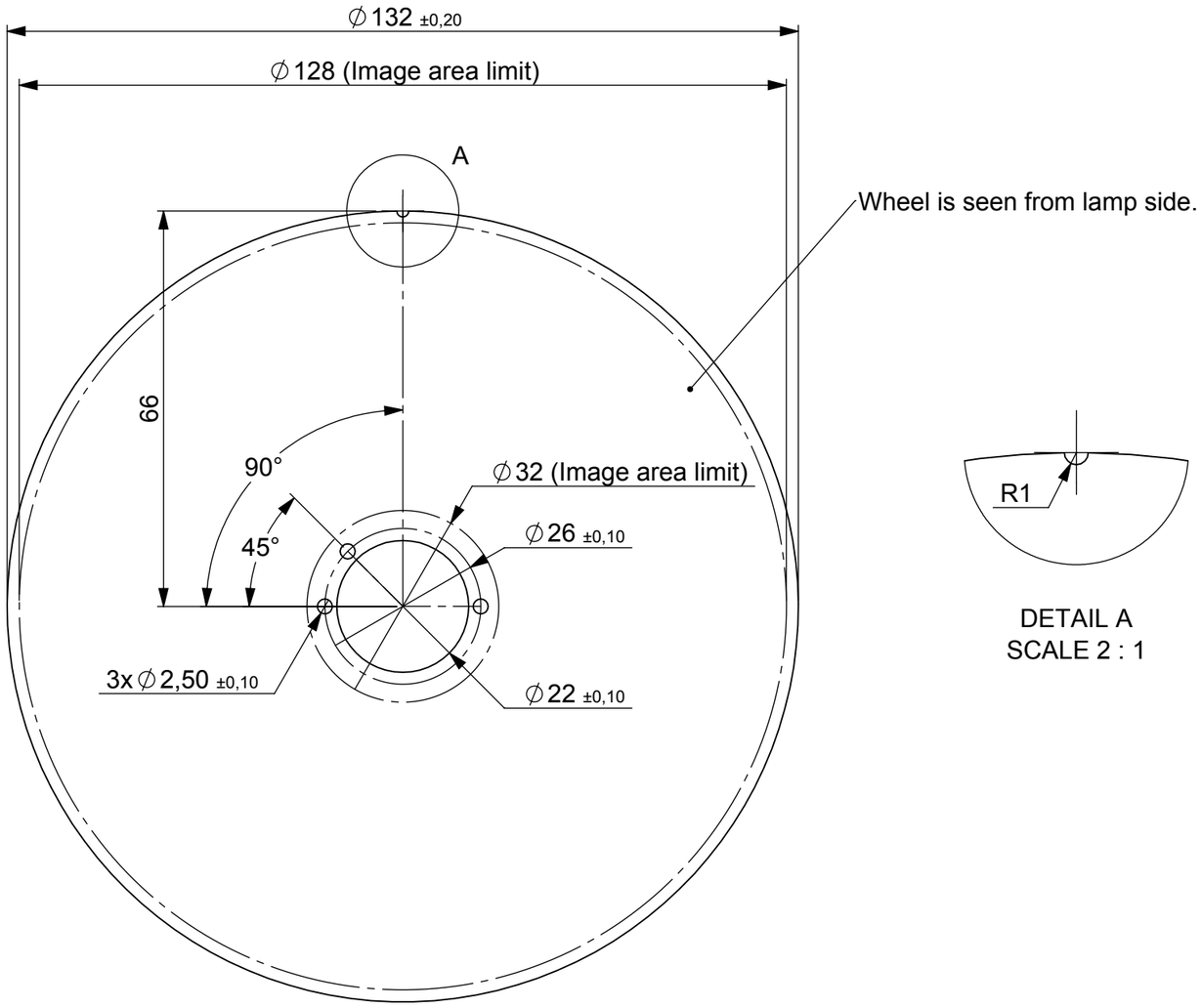

DETAIL A
SCALE 2 : 1

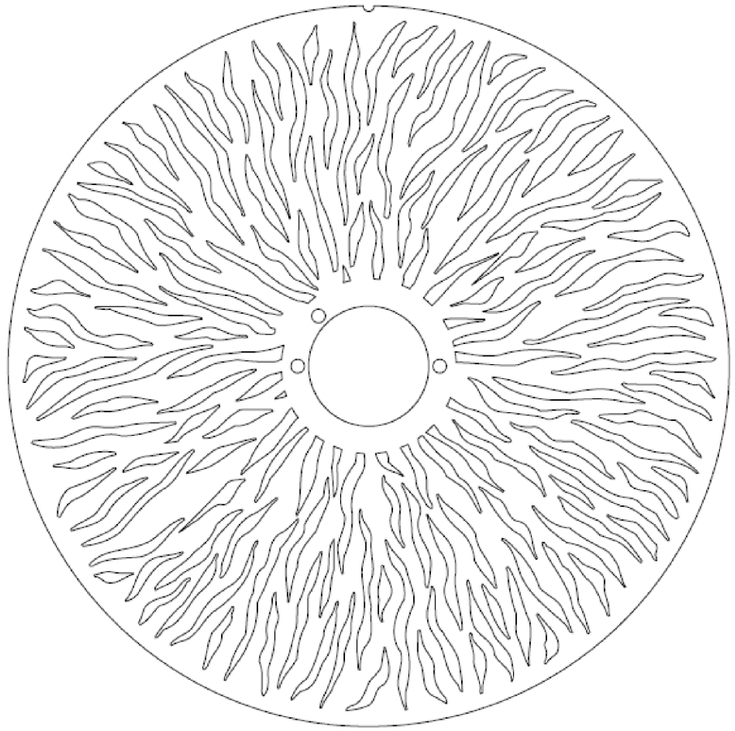

Example above!

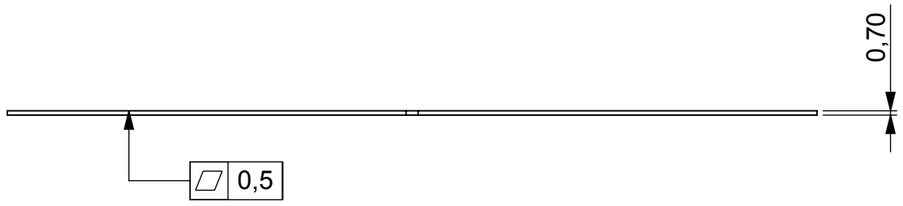

Rev.	Date	Resp.	CO no. / Comment
A	31.01.2018	rd_lto	First release

Martin by HARMAN	First used in MAC Encore Performance		Material Aluminum EN AW-1050A H14	
Item to be Chemical polished			General linear tolerance ISO 2768-1 f	
Item to be			General angular tolerance	
Item to be	Color	Format A3	Scale 1:1	Unit mm
Description (Model in view 5098659-00-A) OPT,ANM WHL,D132,d128,d32,documentation			Item no.-Rev. 5098659-00-A	

© 2018 Martin Professional ApS | Confidential

Martin™ General Technical Specification apply to this item