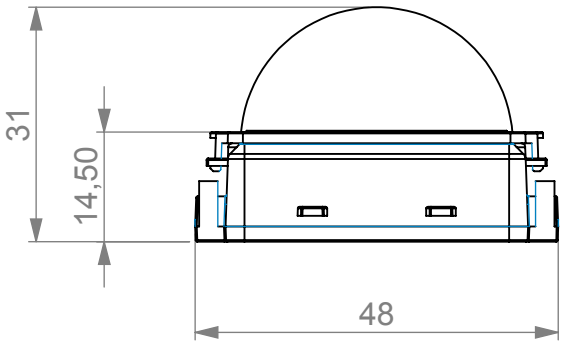

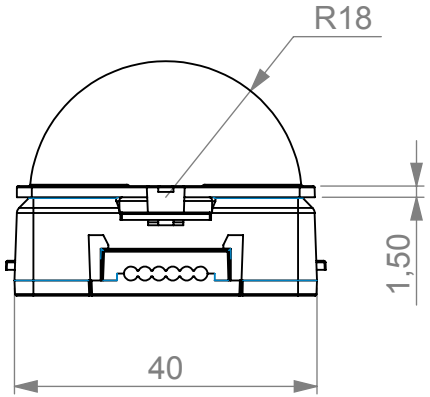

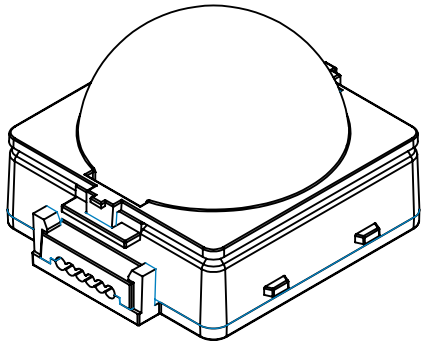

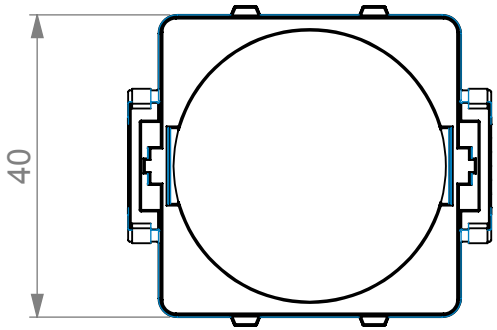

Rev.	Date	Resp.	CO no. / Comment
A	17.01.2013	rd_lto	DWG with dimensions

Martin™	First used in		Material		
Item to be			General linear tolerance		
Item to be			General angular tolerance		
Item to be		Color		Format A4	Scale 1:1	Unit mm

Description (Model in view VC-Dot 9 with Diffuser Dome)

VC-Dot 9 with Diffuser Dome

Item no.-Rev.

© 2012 Martin Professional A/S | Confidential | Martin™ General Technical Specification apply to this item