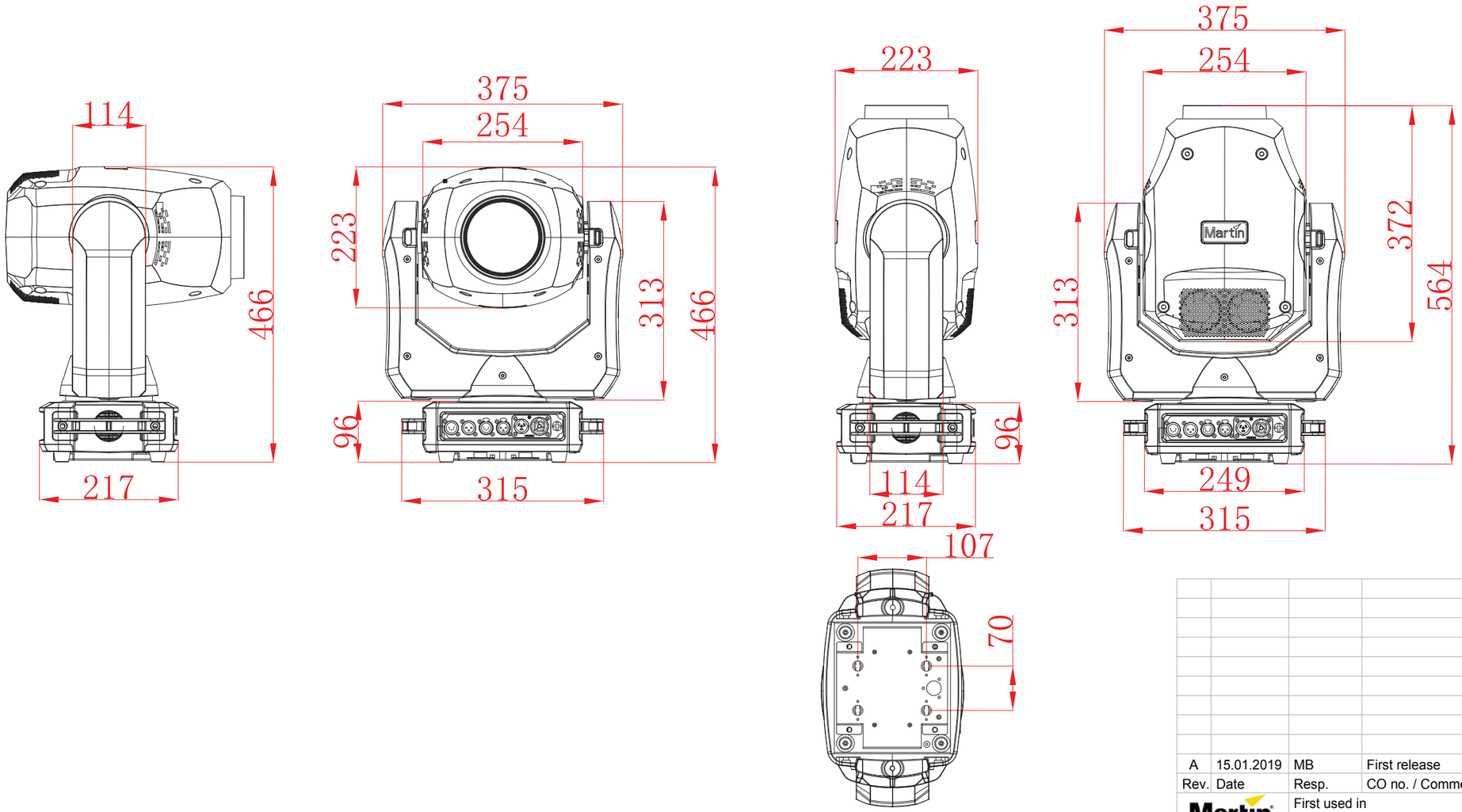

Rev.	Date	Resp.	CO no. / Comment
A	15.01.2019	MB	First release

Martin by HARMAN	First used in		Material		
Item to be			General linear tolerance		
Item to be			General angular tolerance		
Item to be		Color		Format A3	Scale -	Unit mm
Description Martin ERA 300 Profile				Item no.-Rev.	

© 2018 Martin Professional ApS Confidential

Martin™ General Technical Specification apply to this item