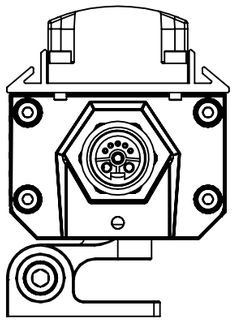

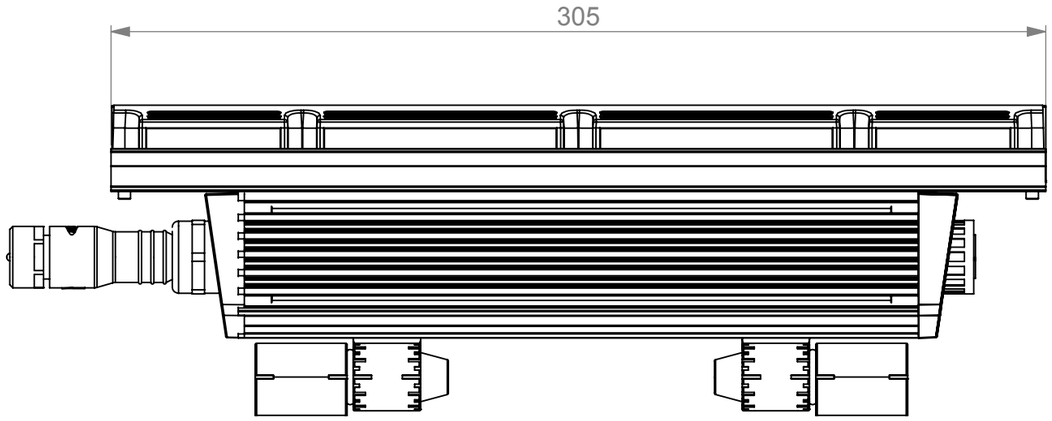

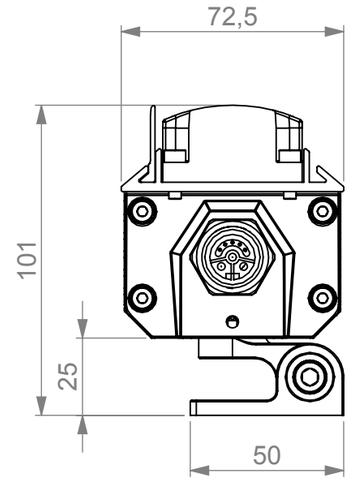

Mounted with
Glare shield (left side)

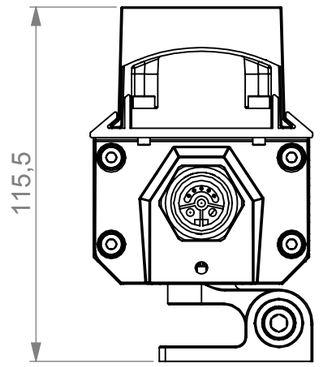

Mounted with
Louvre

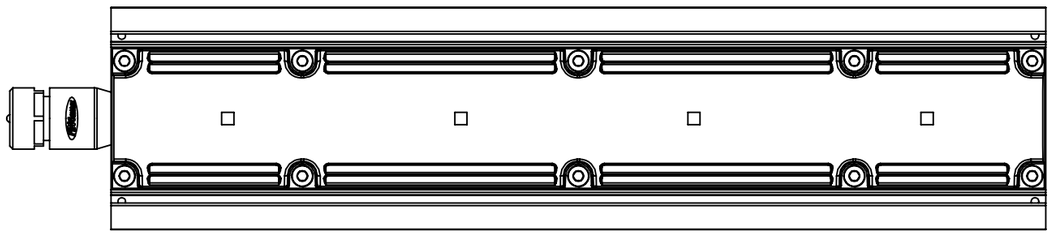

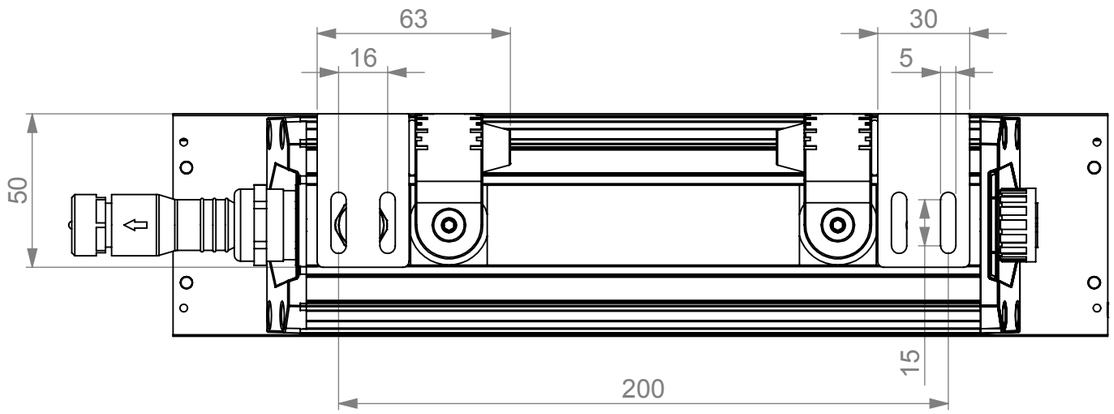

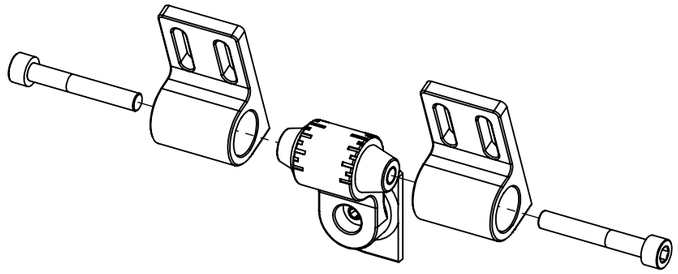

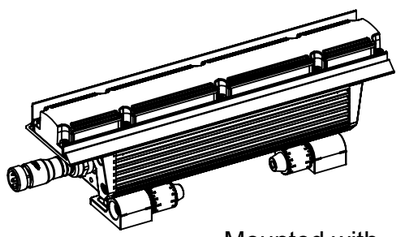

Mounted with
Glare shield (left side)

SCALE 1:5

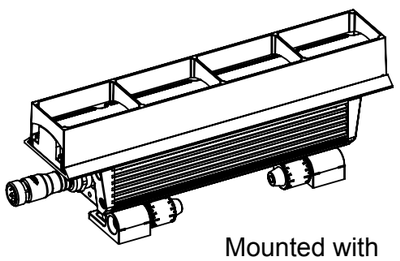

Mounted with
Louvre

SCALE 1:5

Rev.	Date	Resp.	CO no. / Comment
B	20.12.2018	rd_lto	
A	28.06.2018	rd_lto	First release

Martin by HARMAN

First used in

Material

Item to be

General linear tolerance

Item to be

General angular tolerance

Item to be

Color

Format A3 | Scale 1:2 | Unit mm

Description

Exterior Linear 310 QUAD Graze

Item no.-Rev.

© 2017 Martin Professional ApS Confidential

Martin™ General Technical Specification apply to this item