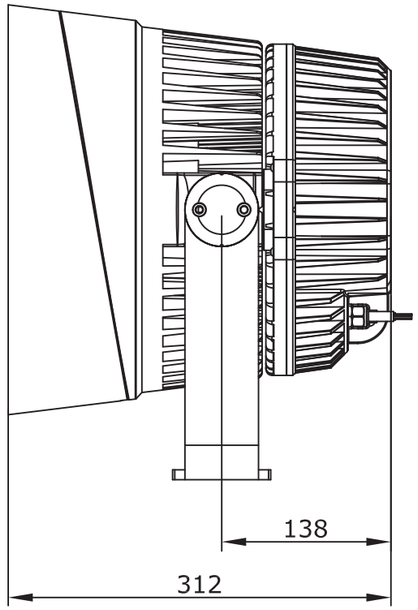

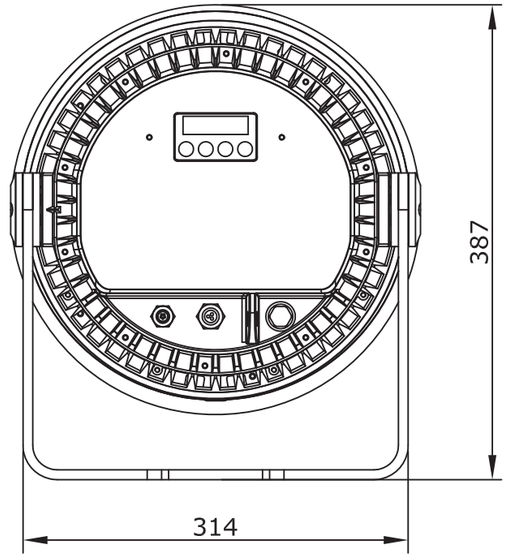

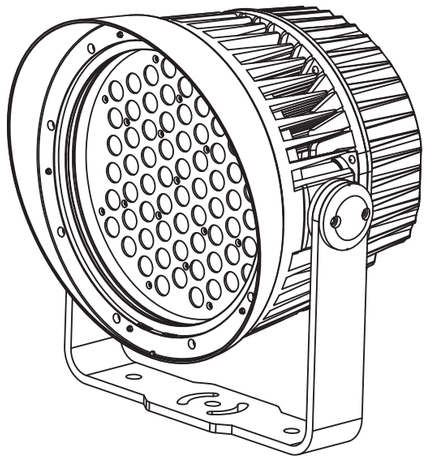

Exterior Wash 200/220 without snoot

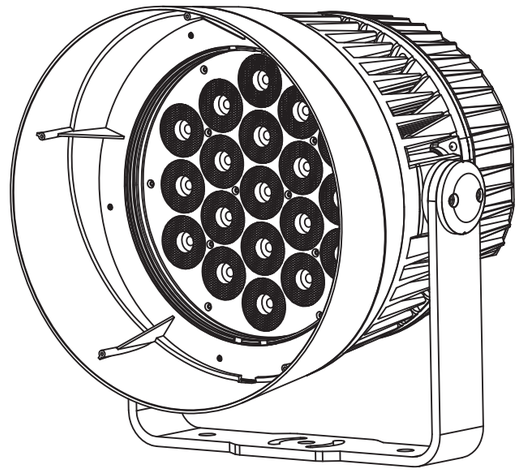

Exterior Wash 210 with snoot

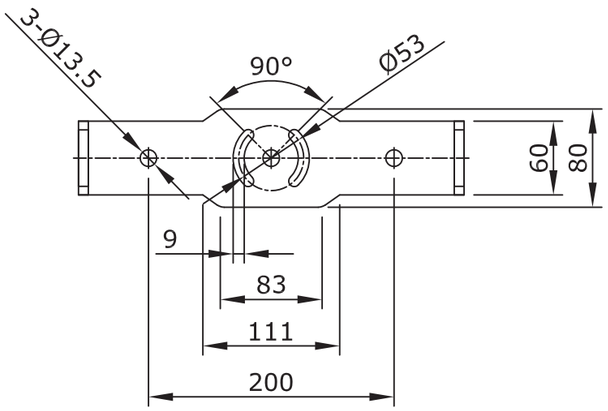

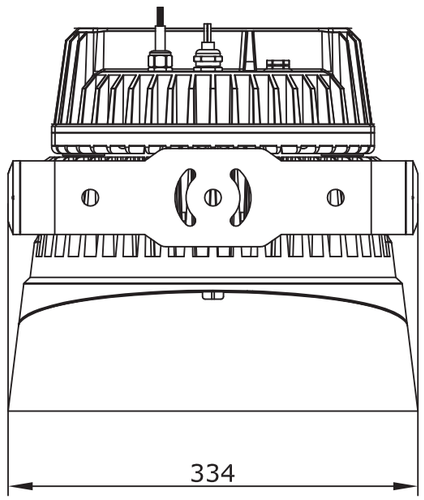

Rev.	Date	Resp.	CO no. / Comment
A	24.09.2018	rd_lto	First release

Martin by HARMAN	First used in		Material		
Item to be			General linear tolerance		
Item to be			General angular tolerance		
Item to be		Color		Format A3	Scale 1:5	Unit mm
Description: Exterior Wash 200 Series with snoot				Item no.-Rev.	

© 2018 Martin Professional ApS Confidential

Martin™ General Technical Specification apply to this item