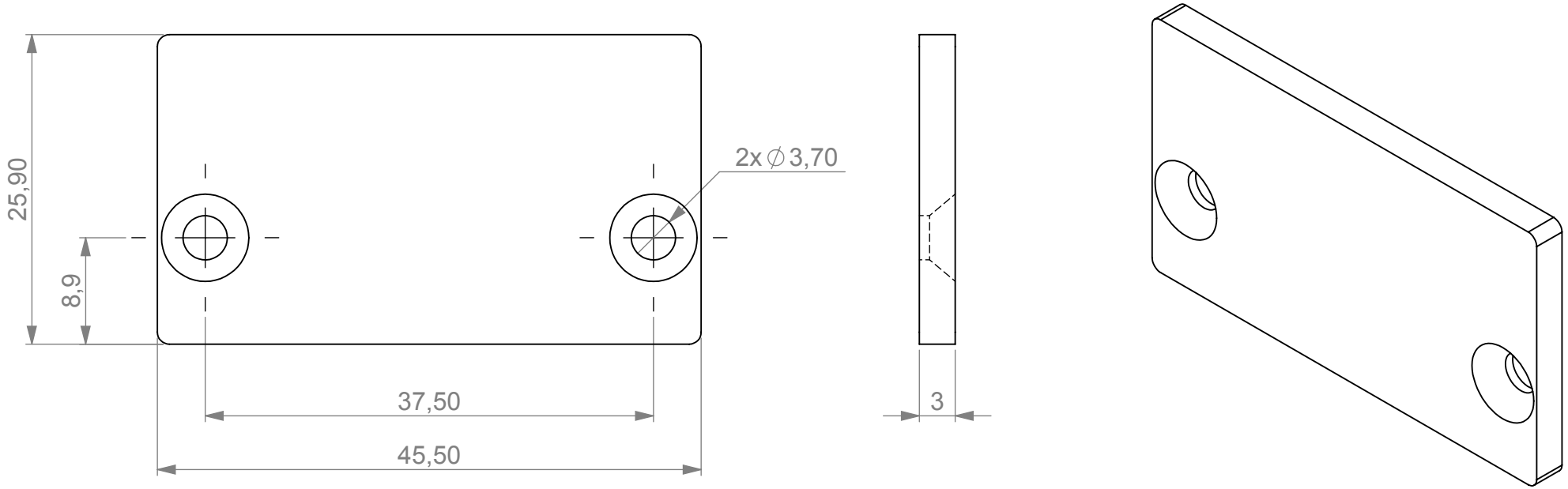

Rev.	Date	Resp.	CO no. / Comment
A	22.02.2012	rd_ffb	First release

Martin™	First used in		Material		
Item to be			General linear tolerance		
Item to be			General angular tolerance		
Item to be		Color		Format A4	Scale 2:1	Unit mm
Description VC-Dot 9 Alu Profile Endcap				Item no.-Rev.	

© 2013 Martin Professional A/S | Confidential | Martin™ General Technical Specification apply to this item