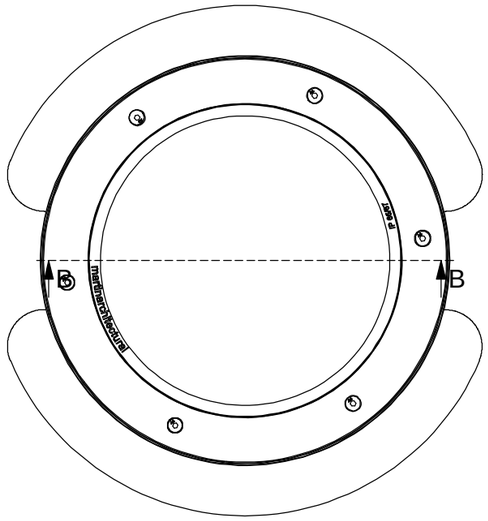

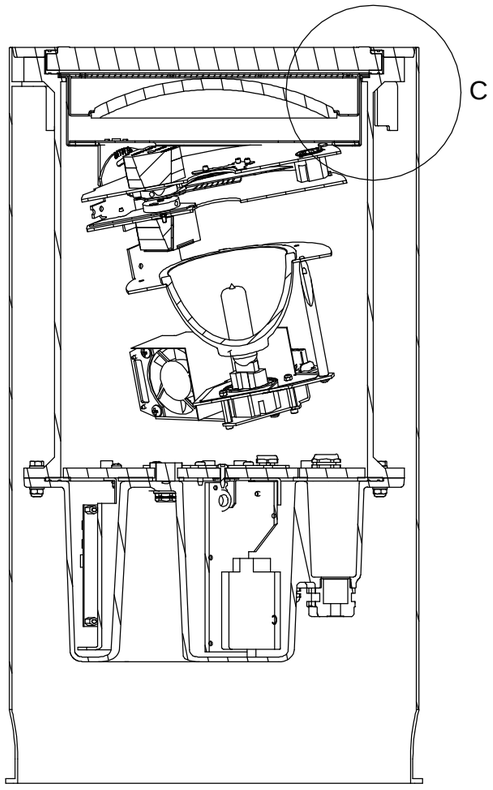

SECTION B-B
SCALE 1 : 5

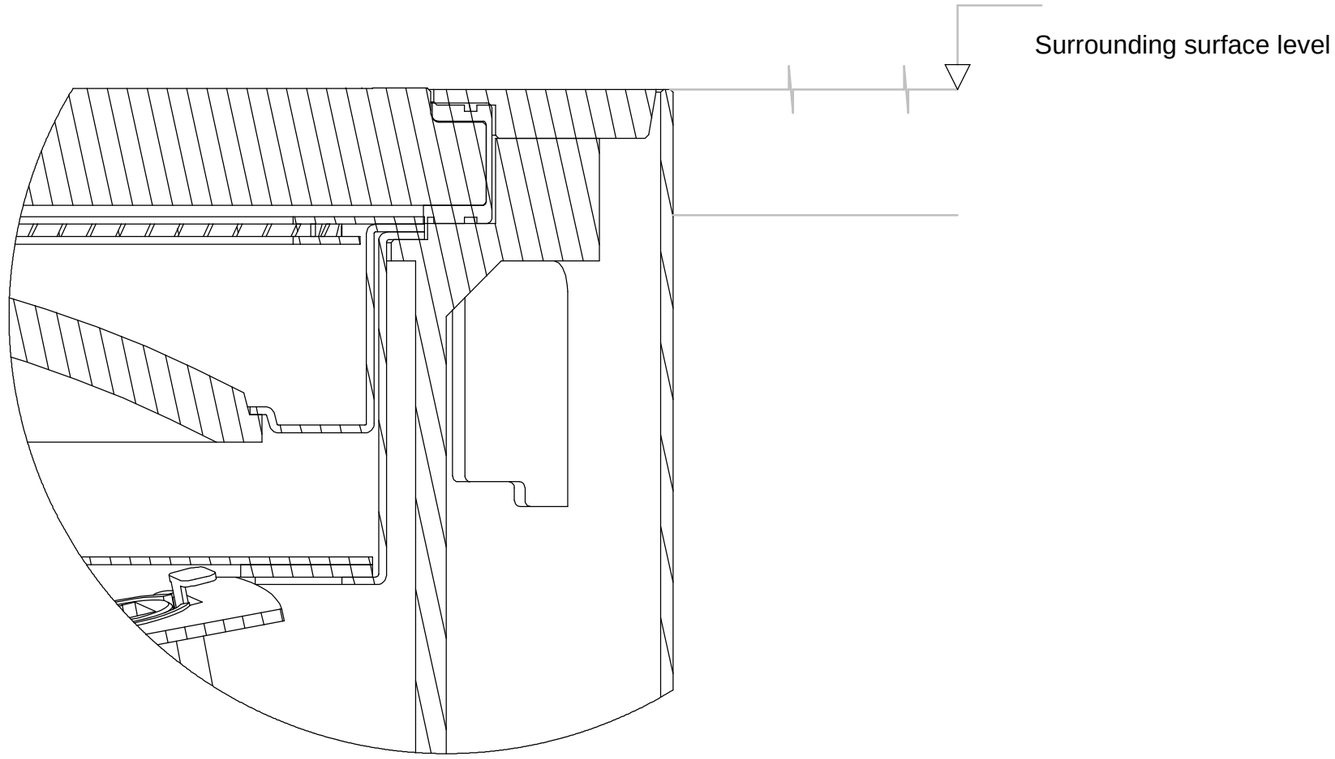

DETAIL C

For this type of installation you use the sleeve for flush mounted Inground - 91611215

Rev.	Date	Resp.	CO no. / Comment

Martin	First used in		Material	
Item to be			General linear tolerance	
Item to be			General angular tolerance	
Item to be	Color	Format A3	Scale 1:1	Unit mm
Description (Model in view sectioncut in sleeve assembly 02) Flush mounted Inground in sleeve			Item no.-Rev.	

Martin Quality Agreement applies to this item